ARTISAN®
TECHNOLOGY GROUP

Your **definitive** source for quality pre-owned equipment.

Artisan Technology Group
(217) 352-9330 | sales@artisantg.com | artisantg.com

Full-service, independent repair center
with experienced engineers and technicians on staff.

We buy your excess, underutilized, and idle equipment
along with credit for buybacks and trade-ins.

Custom engineering
so your equipment works exactly as you specify.

- Critical and expedited services
- In stock / Ready-to-ship
- Leasing / Rentals / Demos
- ITAR-certified secure asset solutions

Expert team | Trust guarantee | 100% satisfaction

All trademarks, brand names, and brands appearing herein are the property of their respective owners.

Find the *Danfoss / Vacon NXS 0045 5 B 2 H 1 SSS* at our website: *Click HERE*

VACON NX
AC DRIVES

BASIC I/O BOARDS
EXPANDER I/O BOARDS
ADAPTER BOARDS

USER MANUAL

VACON
DRIVEN BY DRIVES

Artisan Technology Group - Quality Instrumentation ... Guaranteed | (888) 88-SOURCE | www.artisantg.com

INDEX

Document ID: DPD00884A
Date: 25.01.2012

1. General information 3
1.1. Board slots on the control board of Vacon NXS and NXP 3
1.2. Board Slots on the control board of Vacon NXL 4
1.3. Option board types 5
1.4. Technical data 6
1.4.1. Isolation 7
1.4.2. Analogue inputs (mA/V) 7
1.4.3. Analogue outputs (mA/V) 7
1.4.4. Control voltage (+24V/EXT +24V) 7
1.4.5. Digital input signal conversion 8
1.5. Hardware protections 10
1.5.1. Terminal block coding 10
1.5.2. Board slot guides and allowed slots 10
1.6. Type identification number 11
1.7. Defining functions to inputs and outputs 11
1.8. Defining a terminal for a certain function with NCDrive programming tool 12
1.9. Option board related parameters 13
2. Installation of Vacon Option Boards 14
2.1. Control cables 16
2.1.1. Cable grounding 16
2.2. Board information sticker 17
3. Descriptions of Vacon option boards 18
3.1. Basic boards OPTA_ 18
3.1.1. OPTA1 19
3.1.2. OPTA2 23
3.1.3. OPTA3 24
3.1.4. OPTA4 25
3.1.5. OPTA5 29
3.1.6. OPTA7 33
3.1.7. OPTA8 39
3.1.8. OPTA9 43
3.1.9. OPTAL 44
3.1.10. OPTAE 46
3.1.11. OPTAN 50
3.2. I/O Expander Boards OPTB_ 54
3.2.1. OPTB1 55
3.2.2. OPTB2 57
3.2.3. OPTB4 58
3.2.4. OPTB5 59
3.2.5. OPTB8 60
3.2.6. OPTB9 62
3.2.7. OPTBB 63

Tel. +358 (0) 201 2121 • Fax +358 (0)201 212 205

Artisan Technology Group - Quality Instrumentation ... Guaranteed | (888) 88-SOURCE | www.artisantg.com

3.2.8. OPTBH 67
3.3. Adapter Boards OPTD_ 69
3.3.1. OPTD1 70
3.3.2. OPTD2 72
3.3.3. OPTD3 76
3.3.4. OPTD6 78
4. Vacon Option Boards – operational details 80

Artisan Technology Group - Quality Instrumentation ... Guaranteed | (888) 88-SOURCE | www.artisantg.com

1. GENERAL INFORMATION

Vacon NX range embodies a wide selection of *expander* and *adapter boards* with which the available I/O of Vacon NX frequency converter can be increased and its versatility improved.

The input and output configuration (I/O) of Vacon NX is designed with modularity in mind. The total I/O is comprised of option boards, each having its own input and output configuration. The boards contain not only normal analogue and digital inputs and outputs, but also fieldbuses and additional application-specific hardware.

The basic, expander and adapter boards are placed in the *board slots* on the control board of the frequency converter. The I/O boards are usually interchangeable between different Vacon types, i.e. NXS and NXP. However, the control boards of these types differ from each other to some extent which means that the use of some I/O boards in different Vacon frequency converter types may be restricted.

1.1 BOARD SLOTS ON THE CONTROL BOARD OF VACON NXS AND NXP

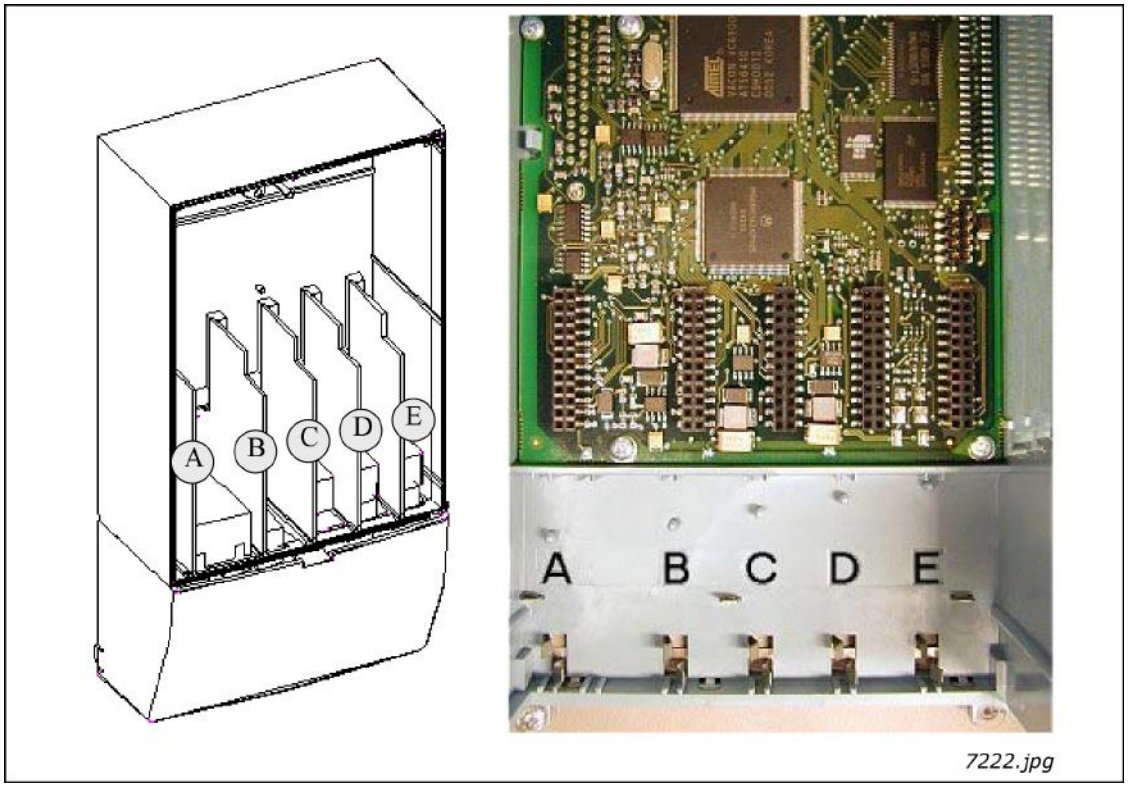

Figure 1. Board slots on control board of the Vacon NXS and NXP

The control board is situated inside the *control unit* of the Vacon NX frequency converter. There are five board slots (labelled A to E) on the control board of NXS and NXP (See User's Manual, Chapter 6.2.1): The connectability of different option boards to different slots depends greatly on the type of the board. For more information on this, see Chapter 1.2. See also the descriptions of the options boards on pages 19 to 78.

Usually, when the frequency converter is delivered from the factory, the control unit includes at least the standard compilation of two basic boards (I/O board and relay board) which are normally installed in slots A and B. The I/O boards mounted at the factory are indicated in the type code of the frequency converter. The three expander slots C, D and E are available for different option boards i.e. I/O expander boards, fieldbus boards and adapter boards.

Tel. +358 (0) 201 2121 • Fax +358 (0)201 212 205
Artisan Technology Group - Quality Instrumentation ... Guaranteed | (888) 88-SOURCE | www.artisantg.com

1.2 BOARD SLOTS ON THE CONTROL BOARD OF VACON NXL

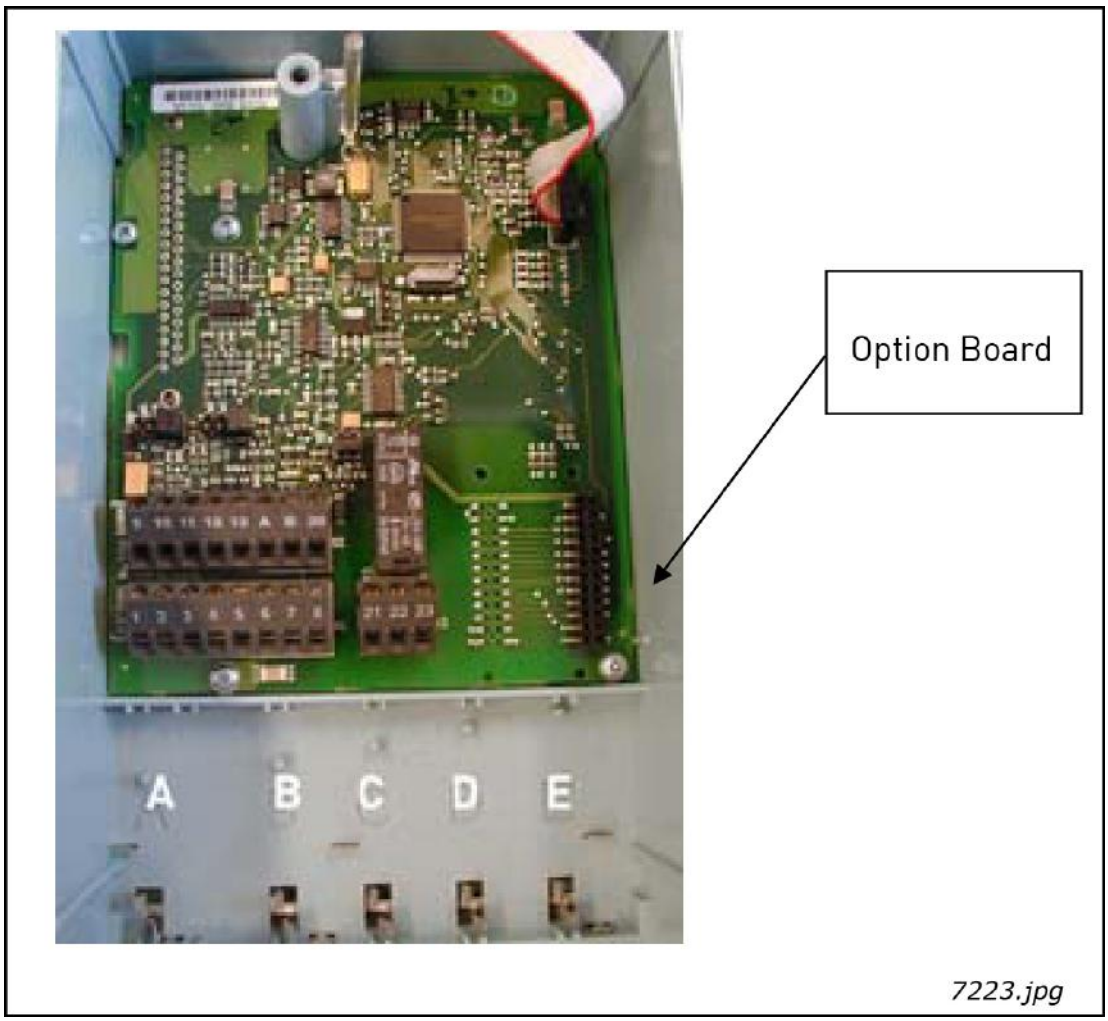

Figure 2. Board slots on control board of Vacon NXL.

The control board of NXL includes fixed standard I/O and one place for option boards (see User's Manual of NXL, Chapter 6.2.). The most typical option board for NXL, OPT-AA, is specified in the User's Manual, Chapter 10.

Artisan Technology Group - Quality Instrumentation ... Guaranteed | (888) 88-SOURCE | www.artisantg.com

1.3 OPTION BOARD TYPES

The Vacon option boards are divided in four groups according to their characteristics: types A, B, C and D. Short descriptions of the types below:

OPTA_

- Basic boards used for basic I/O (NXS, NXP); normally pre-installed at the factory.
- This board type uses slots A, B or C.

See pages 18 to 50 for a detailed presentation of the boards of this type. See also the principle diagram on the options boards and their equipment on page 80.

OPTB_

- Option boards used for I/O expansion.
- Normally pluggable into slots B, C, D and E.

See pages 54 to 63 for a detailed presentation of the boards of this type. See also the principle diagram on the options boards and their equipment on page 80.

OPTC_

- Fieldbus boards (e.g. Profibus or Modbus).
- These boards are connected to slots D and E.

See a separate manual on each individual Fieldbus Board. Ask factory or your nearest distributor for more information.

OPTD_

- Adapter boards
- Boards with fiber optic adapters, e.g. System Bus Fiber Optic Adapter Board.
- Connect the adapter boards to slots D and E (see however page 76).

See pages 67 to 78 for a detailed presentation of the boards of this type. See also the principle diagram on the option boards and their equipment on page 80.

Tel. +358 (0) 201 2121 • Fax +358 (0)201 212 205

Artisan Technology Group - Quality Instrumentation ... Guaranteed | (888) 88-SOURCE | www.artisantg.com

1.4 TECHNICAL DATA

The data in the table below applies to the inputs and outputs on all basic and expander boards.

Table 1. Technical data

Safety (all boards)	Comply with EN50178, C-UL and EN60204-1 Inputs/outputs galvanically isolated; Isolation voltage rate 500V
Input/output type	**Specification**
Analogue inputs (AI), voltage	0...±10V, $R_i \geq 200$ kΩ, single-ended; Resolution 10 bits/0.1%, accuracy ±1% of the full display (–10...+10V joystick control)
Analogue inputs (AI), current	0(4)...20mA, R_i = 250Ω, differential Resolution 10 bits/0.1%, accuracy ±1% of the full display
Digital inputs (DI), DC voltage controlled	24V: "0"≤10V, "1"≥18V, R_i > 5kΩ
Digital inputs (DI), AC voltage controlled	Control voltage 42...240 VAC "0"<33V, "1">35V
Auxiliary voltage (output) (+24V) Auxiliary voltage (input) (ext. +24V)	24V (±15%), max 250mA (total summarized load from ext. +24V outputs, max. 150 mA from one board. 24VDC (±10%, max. ripple voltage 100mV RMS), max. 1A. In special applications where PLC type functions are included in the control unit the input can be used as external auxiliary power supply for control boards as well as I/O boards.
Reference voltage (output) (+10V_{ref})	10V – 0% – +2%, max. 10mA
Analogue output (AO), current (mA)	0(4)...20mA, R_L<500Ω, resolution 10 bits/0.1%, accuracy ≤ ±2%
Analogue output (AO), voltage (V)	0(2)...10V, RL ≥ 1kΩ, resolution 10 bits, accuracy ≤ ±2%
Relay outputs (RO)	Switching capacity 24VDC/8A 250VAC/8A 125VDC/0.4A Max. continuous load 2A rms Min.switching load: 5V/10mA
Thermistor input (TI)	R_{trip} = 4.7kΩ (PTC type)
Encoder control voltage (+5V/+12V/ +15V/+24V)	See OPTA4, OPTA5, OPTA7, OPTAE and OPTBB technical data
Encoder connections (inputs, outputs)	See OPTA4, OPTA5, OPTA7, OPTAE and OPTBB technical data
Environment (all boards)	
Ambient operating temperature	–10...55°C
Storing temperature	–40...60°C
Humidity	<95%, no condensation allowed
Altitude	Ma 1000m
Vibration	0,5 G at 9...200 Hz

Artisan Technology Group - Quality Instrumentation ... Guaranteed | (888) 88-SOURCE | www.artisantg.com

1.4.1 ISOLATION

The control connections are isolated from the mains potential and the I/O ground is connected directly to the frame of the frequency converter. Digital inputs and relay outputs are isolated from the I/O ground. For digital input arrangements, see Chapter *Digital input signal conversions* on page 8.

1.4.2 ANALOGUE INPUTS (MA/V)

Analogue inputs of I/O boards can be used as either current inputs or voltage inputs (see detailed description of each board). The signal type is selected with a jumper block on the board. In case the voltage type input is used you still have to define the voltage range with another jumper block. The factory default value for the analogue signal type is given in the description of the board. For detailed information, see the description of the board in question.

1.4.3 ANALOGUE OUTPUTS (MA/V)

In the same way as in the analogue inputs, the output signal type (current/voltage) can be selected with jumper except for some expander boards with analogue outputs used only with current signals.

1.4.4 CONTROL VOLTAGE (+24V/EXT +24V)

The control voltage output +24V/EXT+24V can be used in two ways. Typically, the +24V control voltage is wired to digital inputs through an external switch. The control voltage can also be used to power-up external equipment, such as encoders and auxiliary relays.

Observe that the specified total load on all available +24V/EXT+24V output terminals may not exceed 250mA. The maximum load on the +24V/EXT+24V output per board is 150mA. See Figure 3.

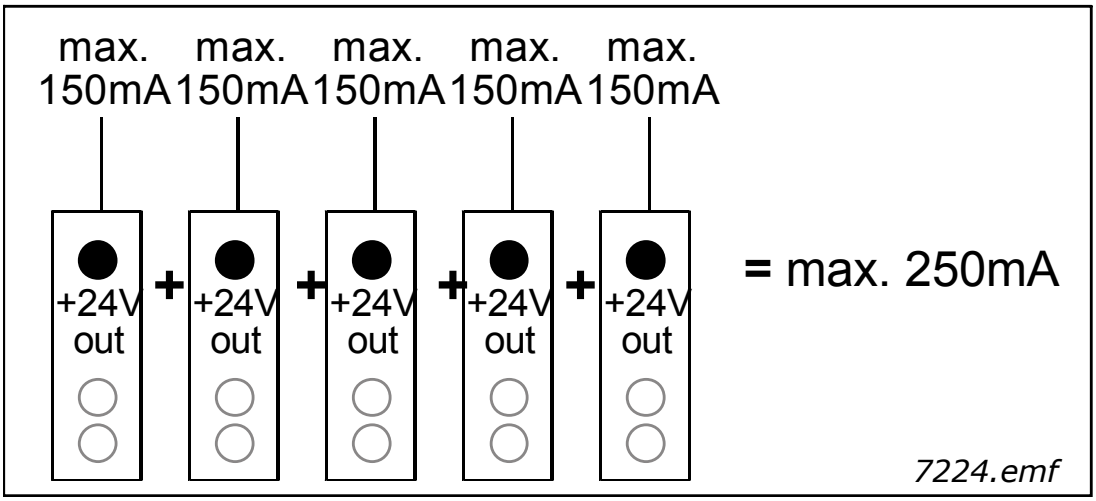

Figure 3. Maximum loads on +24V/EXT+24V output

The +24V/EXT+24V outputs can further be used to externally power-up the control board as well as the basic and expander boards. If an external power supply is connected to EXT+24V output, the control board, basic boards and expander boards remain live even if mains should be lost on the frequency converter. This ensures sufficient functioning of the control logic (not the motor control, however) and some alarms in exceptional power-loss situations. Furthermore, fieldbus links remain powered which enables e.g. the Profibus Master to read valuable data on the frequency converter.

NOTE: The power unit is not powered through the EXT+24V and therefore the motor control does not work if the mains is lost.

Tel. +358 (0) 201 2121 • Fax +358 (0)201 212 205

Artisan Technology Group - Quality Instrumentation ... Guaranteed | (888) 88-SOURCE | www.artisantg.com

Requirements for an external power back-up:

- output voltage +24DC±10%, max. ripple voltage 100mV RMS
- max. current 1A
- 1A external fuse (no internal short-circuit protection on the control board

NOTE: Analogue outputs and inputs do not work with only +24V supplied to the control unit.

If there is a +24V/EXT+24V output on the board it is short-circuit protected locally. Should one of the +24V/EXT+24V outputs short-circuit, the others would remain powered because of the local protection.

1.4.5 DIGITAL INPUT SIGNAL CONVERSION

The active signal level depends on which potential the common input CMA (and CMB if available) is connected to. The alternatives are +24V or Ground (0V). See Figure 4, Figure 5 and Figure 6.

The 24-volt control voltage and the ground for the digital inputs and the common input (CMA) can be either internal or external.

Some typical input signal conversion examples are shown below. If you use the internal +24V from the frequency converter, the following arrangements are possible:

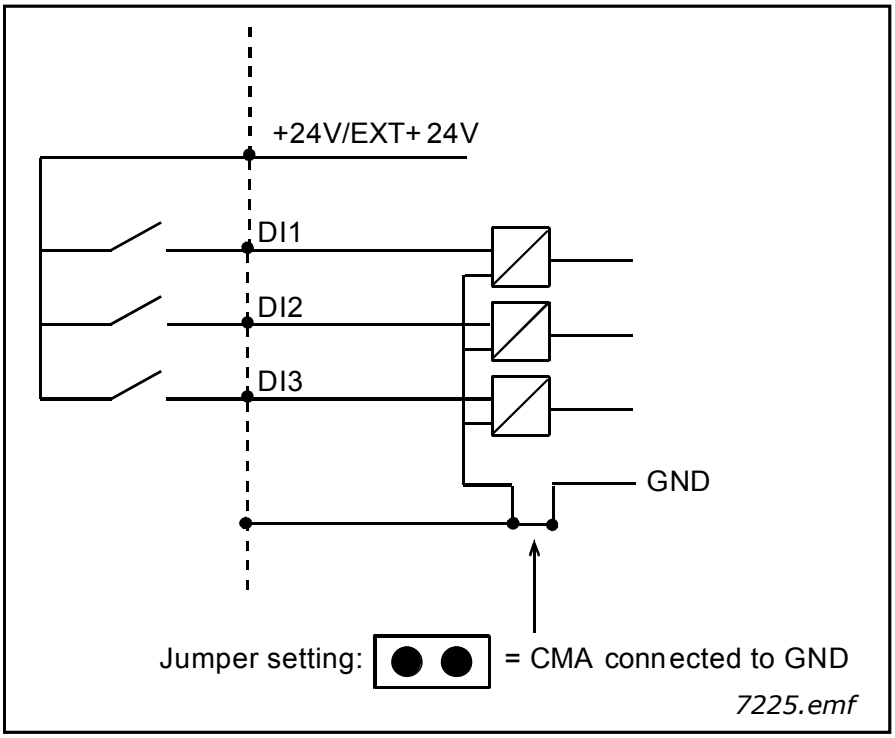

Figure 4. If CMA is connected to GND with inboard jumper the internal +24V is used and the CMA terminal ed not be wired

Artisan Technology Group - Quality Instrumentation ... Guaranteed | (888) 88-SOURCE | www.artisantg.com

If you use an external +24V the following arrangements are possible:

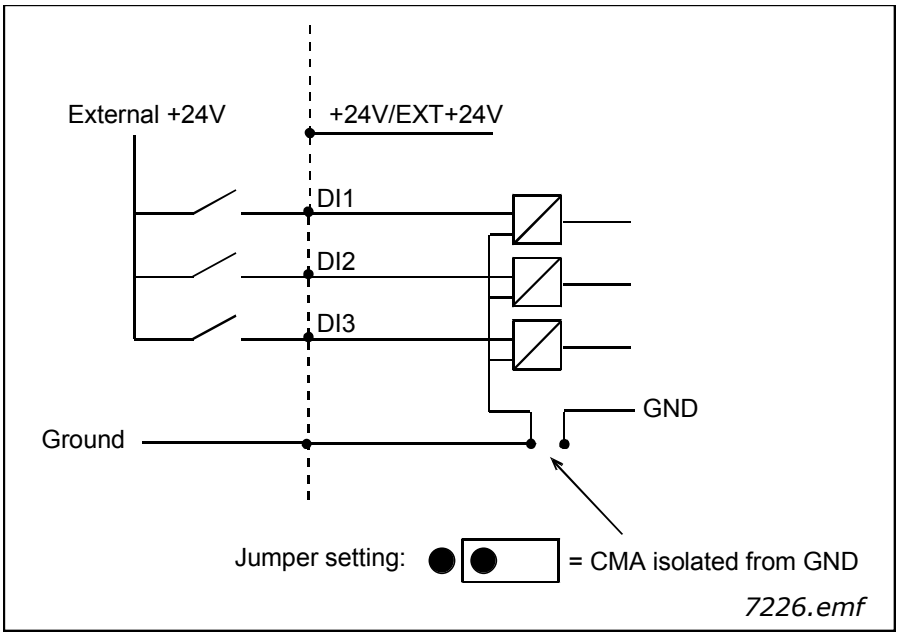

Figure 5. Positive logic with external +24V when CMA is isolated from GND using onboard jumper. The input is active when the switch is closed

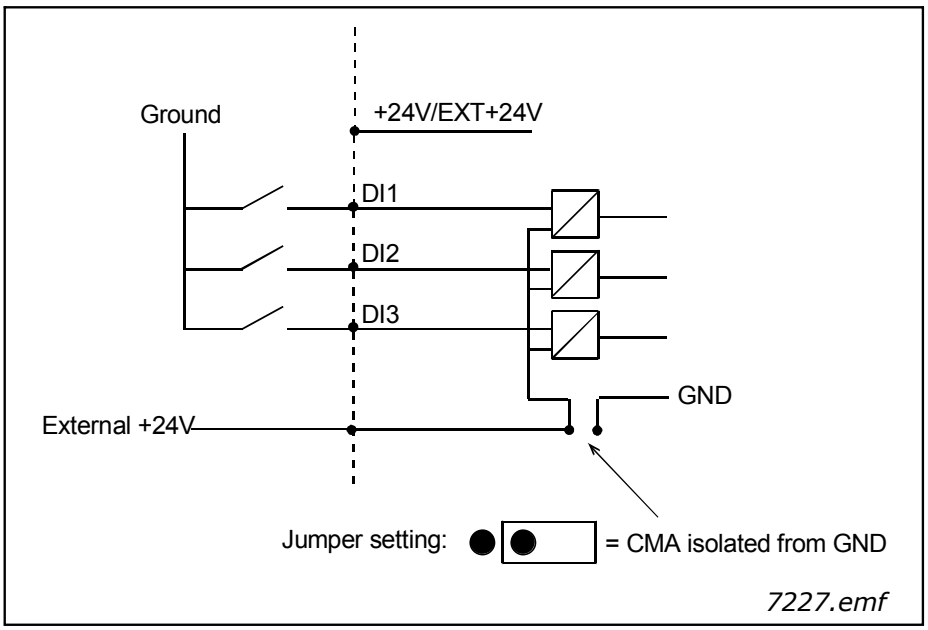

Figure 6. Negative logic with external +24V when CMA is isolated with onboard jumper. The input is active when the switch is closed (0V is the active signal)

You can make the positive and negative logic arrangements also with the internal +24V. Place the jumper block in the 'CMA isolated from GND' position (as above) and wire the CMA terminal to the GND terminal of the frequency converter.

Tel. +358 (0) 201 2121 • Fax +358 (0)201 212 205

Artisan Technology Group - Quality Instrumentation ... Guaranteed | (888) 88-SOURCE | www.artisantg.com

1.5 HARDWARE PROTECTIONS

1.5.1 TERMINAL BLOCK CODING

In order to avoid incorrect connections of terminal blocks to boards, some terminal blocks as well as related terminal connectors on the board are uniquely coded. For more information, see the description of the individual board.

1.5.2 BOARD SLOT GUIDES AND ALLOWED SLOTS

You cannot mount an option board into any slot.Table 43 and Table 44 show which slots are allowed for which option boards. For reasons of safety, slots A and B are protected in hardware against mounting of unallowed boards. As regards mounting of unallowed boards into slots C, D and E, the boards just will not work, there is no danger of health or equipment damage.

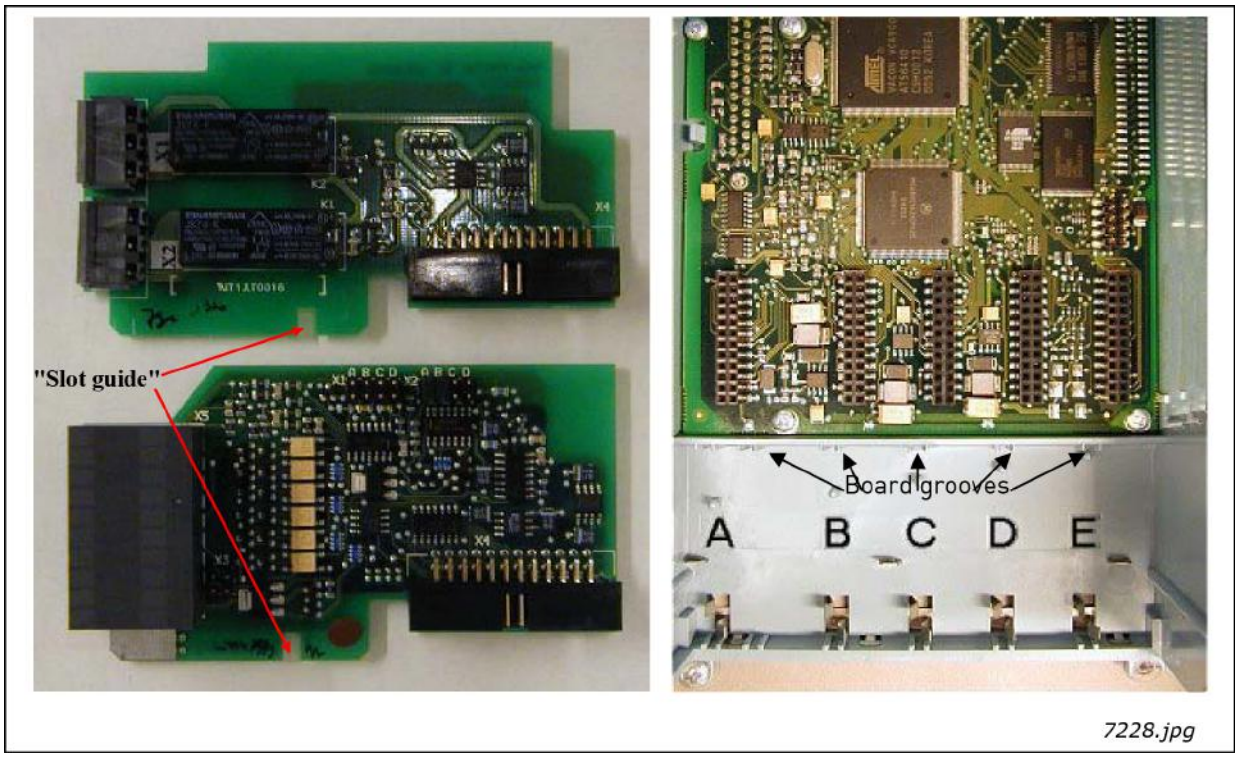

Figure 7. Board guide to prevent incorrect mountings

Artisan Technology Group - Quality Instrumentation ... Guaranteed | (888) 88-SOURCE | www.artisantg.com

1.6 TYPE IDENTIFICATION NUMBER

NOTE: *This information is relevant only for special applications designers using the Vacon NC1131-3 engineering tool.*

Each Vacon OPTxx board has a unique type designation code. Besides the type designation code, each board has a unique Type identification number which is used by the system program to identify which board is plugged into which board slot. The system program and the application use the Type ID also to establish the needed connections in order to achieve the desired functionality of the available I/O boards in the control unit. The ID code is loaded in the memory of the board.

1.7 DEFINING FUNCTIONS TO INPUTS AND OUTPUTS

How to connect functions and the available I/O depends on the application you use. The Vacon All in One Application Package includes seven applications: *Basic Application*, *Standard Application*, *PID Control Application*, *Multi-Step Speed Control Application*, *Local/Remote Control Application*, *Pump and Fan Control Application with Autochange* and *Multipurpose Control Application* (see Application Manuals). All but two applications of these use the conventional Vacon method to connect functions and the I/O. In the *Function to Terminal Programming Method (FTT)*, you have a fixed input or output that you define a certain function for. The mentioned two applications, *Pump and Fan Control* and *Multipurpose Control Application*, however, use the *Terminal to Function Programming Method (TTF)* in which the programming process is carried out the other way round: Functions appear as parameters which the operator defines a certain input/output for.

Connecting a certain input or output to a certain function (parameter) is done by giving the parameter an appropriate value, the *address code*. The code is formed of the *Board slot* on the Vacon NX control board (see page 3 and 4) and the *respective input/output number*. See below.

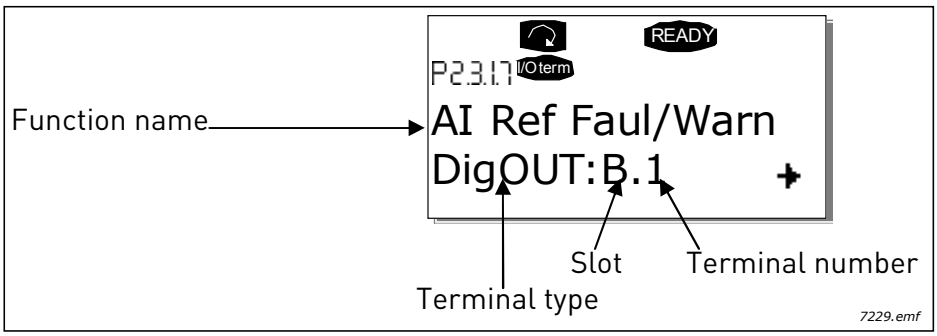

Example: You use the Pump and Fan Control Application. You want to connect the digital output function Reference fault/warning *(parameter 2.3.1.7) to the digital output DO1 on the basic board OPTA1.*

First find the parameter 2.3.1.7 on the keypad. Press the *Menu button right* once to enter the edit mode. On the *value line*, you will see the terminal type on the left (DigIN, DigOUT, An.IN, An.OUT) and on the right, the present input/output the function is connected to (B.3, A.2 etc.), or if not connected, a code 0.#.

When the value is blinking, hold down the *Browser button up* or *down* to find the desired board slot and input/output number. The program will scroll the board slots starting from 0 and proceeding from A to E and the I/O numbers from 1 to 10.

Once you have set the desired code, press the *Enter button* once to confirm the change.

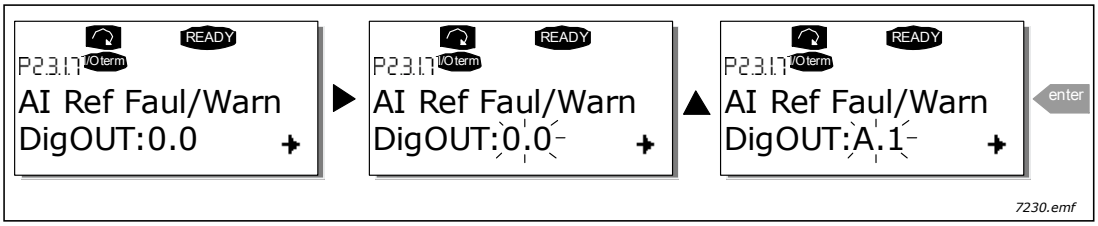

Tel. +358 (0) 201 2121 • Fax +358 (0)201 212 205
Artisan Technology Group - Quality Instrumentation ... Guaranteed | (888) 88-SOURCE | www.artisantg.com

1.8 DEFINING A TERMINAL FOR A CERTAIN FUNCTION WITH NCDRIVE PROGRAMMING TOOL

If you use the NCDrive Programming Tool for parametrizing you will have to establish the connection between the function and input/output in the same way as with the control panel. Just pick the address code from the drop-down menu in the *Value* column (see Figure 8 below).

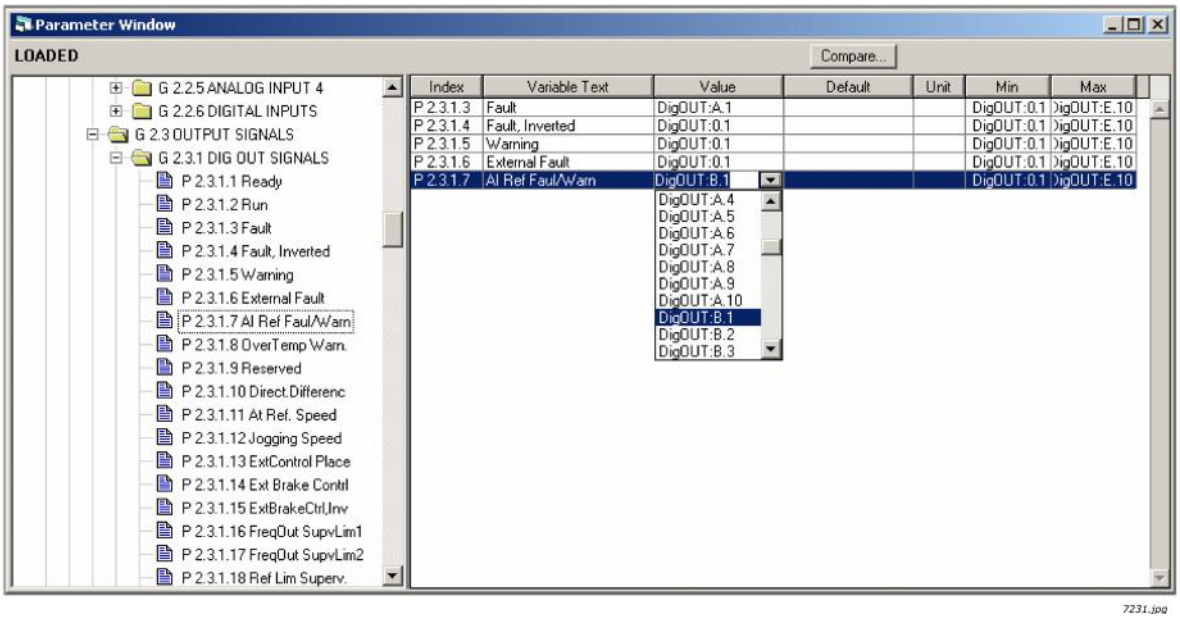

Figure 8. Screenshot of NCDrive programming tool; Entering the address code

⚠	Be ABSOLUTELY sure not to connect two functions to one and same output in order to avoid function overruns and to ensure flawless operation.

NOTE: The *inputs*, unlike the *outputs*, cannot be changed in RUN state.

Artisan Technology Group - Quality Instrumentation ... Guaranteed | (888) 88-SOURCE | www.artisantg.com

1.9 OPTION BOARD RELATED PARAMETERS

Some of the input and output functions of certain option boards are controlled with associated parameters. The parameters are used to set the signal ranges for analogue inputs and outputs as well as values for different encoder functions.

The board-related parameters can be edited in the *Expander Board Menu* (M7) of the control keypad.

Enter the following menu level (G#) with the Menu button right. At this level, you can browse through slots A to E with the Browser buttons to see what expander boards are connected. On the lowermost line of the display you also see the number of parameters associated with the board. Edit the parameter value as shown below. For more information on the keypad operation, see Vacon NX User's Manual, Chapter 7. See Figure 9.

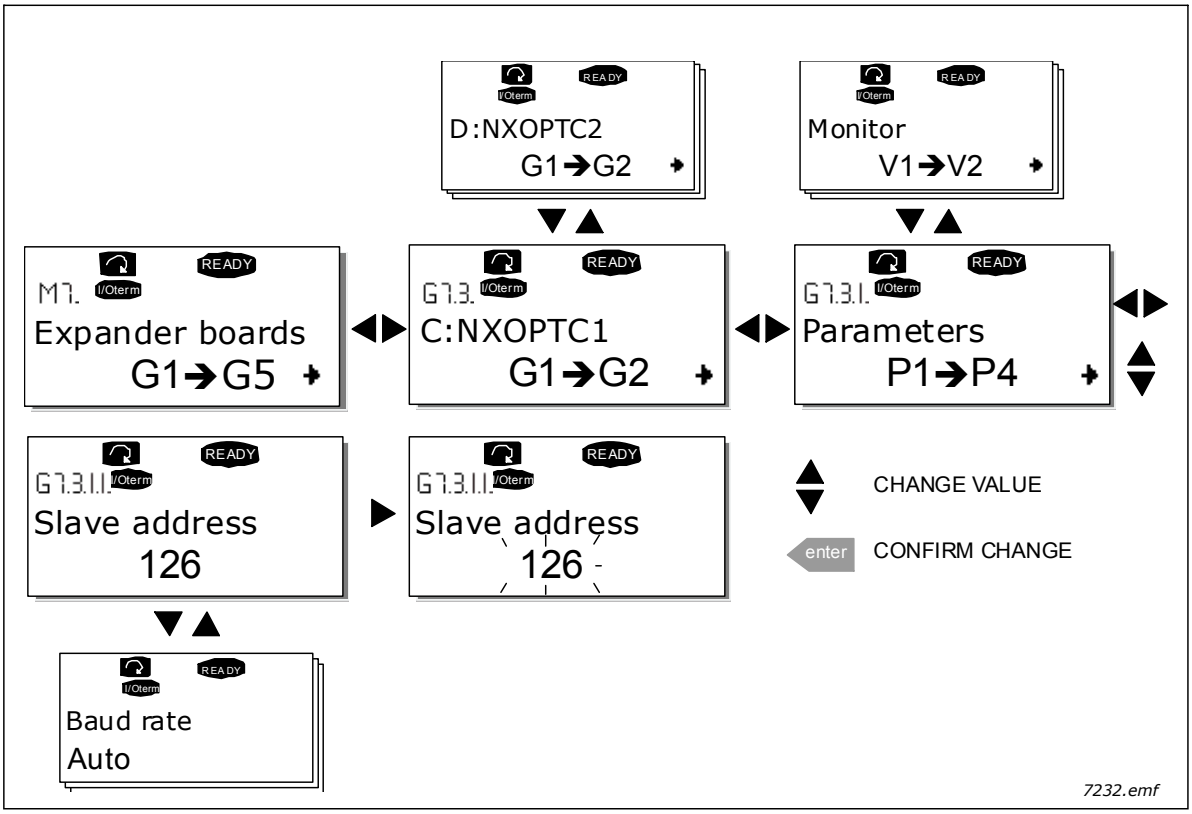

Figure 9. Board parameter value editing

NOTE: Fieldbus boards (OPTC_) also have fieldbus-related parameters. These boards are, however, described in the separate fieldbus board manuals (please visit http://www.vacon.com/support/documents.html.

Tel. +358 (0) 201 2121 • Fax +358 (0)201 212 205

Artisan Technology Group - Quality Instrumentation ... Guaranteed | (888) 88-SOURCE | www.artisantg.com

2. INSTALLATION OF VACON OPTION BOARDS

⚠	It is not allowed to add or replace option boards or fieldbus boards on a frequency converter with the power switched on. This may damage the boards.

A	Vacon NX frequency converter. 7233.jpg
B	Remove the cable cover. 7234.jpg
C	Open the cover of the control unit. 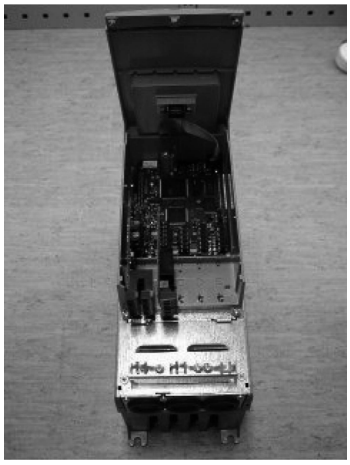 7235.jpg

Artisan Technology Group - Quality Instrumentation ... Guaranteed | (888) 88-SOURCE | www.artisantg.com

D

Install the option board in a correct slot on the control board of the frequency converter. On attaching (also removing) the board, hold it in horizontally straight position to avoid twisting the connector pins. See the photos below.

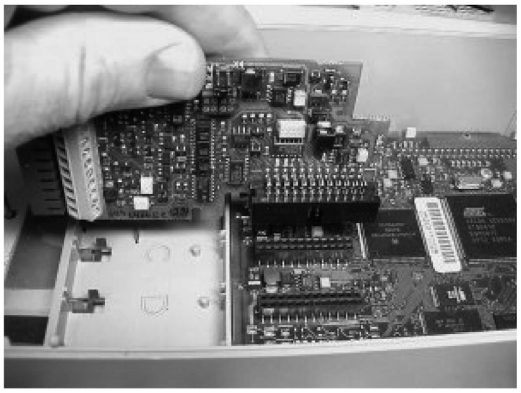

7236.jpg

7237.jpg

Make sure that the board (see below) fits tightly in the metal clamp and the plastic groove. If the board seems to be difficult to fit in the slot you may have to check the allowed slots for your option board.
NOTE: Check that the jumper settings on the board correspond to you needs.
Finally, close the cover of the frequency converter and the cable cover.

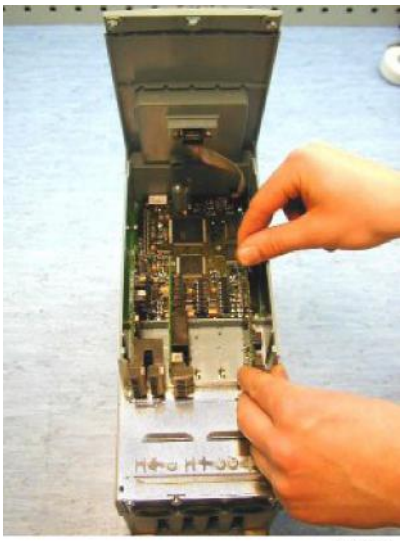

7238.jpg

7239.jpg

Tel. +358 (0) 201 2121 • Fax +358 (0)201 212 205

Artisan Technology Group - Quality Instrumentation ... Guaranteed | (888) 88-SOURCE | www.artisantg.com

2.1 CONTROL CABLES

The control cables used shall be at least 0.5mm^2 screened multicore cables. The maximum terminal wire size is 2.5mm^2 for the relay terminals and 1.5 mm^2 for other terminals.

Find the tightening torques of the option board terminals in the table below.

Table 2. Tightening torques of terminals

Terminal screw	Tightening torque	
	Nm	lb-in.
Relay and thermistor terminals (screw M3)	0.5	4.5
Other terminals (screw M2.6)	0.2	1.8

Table 3. Cable types required to meet standards

Cable type	Level H, C	Level L
Control cable	4	4

Level H = EN 61800-3+A11, 1st environment, restricted distribution
EN 61000-6-4

Level L = EN61800-3, 2nd environment

4 = Screened cable equipped with compact low-impedance shield (NNCABLES /Jamak, SAB/ÖZCuY-O or similar).

2.1.1 CABLE GROUNDING

We recommend to ground the control cables in the manner presented above.

Strip the cable at such distance from the terminal that you can fix it to the frame with the grounding clamp.

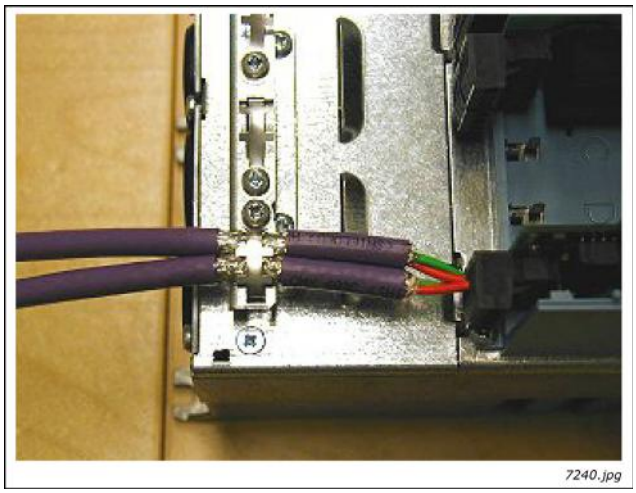

Figure 10. Grounding of control cable

Artisan Technology Group - Quality Instrumentation ... Guaranteed | (888) 88-SOURCE | www.artisantg.com

2.2 BOARD INFORMATION STICKER

Each I/O option board package delivered by the factory includes a sticker (shown below) where possible modifications made in the frequency converter are noted. Please check *Option board* (1), mark the board type (2), the slot into which the board is mounted (3) and the mounting date (4) on the sticker. Finally, attach the sticker on your drive.

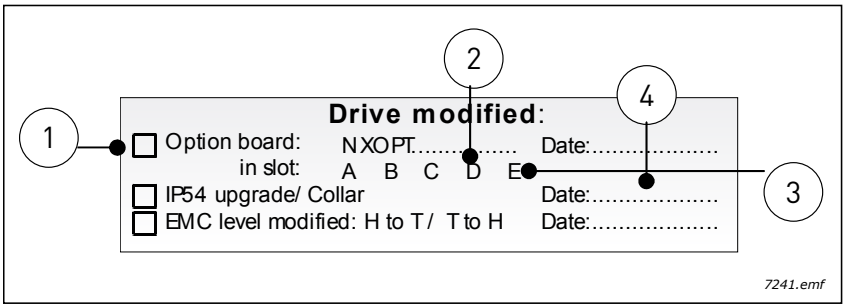

Tel. +358 (0) 201 2121 • Fax +358 (0)201 212 205
Artisan Technology Group - Quality Instrumentation ... Guaranteed | (888) 88-SOURCE | www.artisantg.com

3. DESCRIPTIONS OF VACON OPTION BOARDS

3.1 BASIC BOARDS OPTA_

- Basic boards used for basic I/O; normally pre-installed at the factory.
- This board type uses slots A, B and C.

The standard Vacon NXS and NXP frequency converters contain two boards placed in slots A and B. The board in slot A (OPTA1, OPTA8 or OPTA9) has digital inputs, digital outputs, analogue inputs and an analogue output. The board in slot B (OPTA2) has two change-over relay outputs. As an alternative to OPTA2, a board of type OPTA3 can also be placed in slot B. In addition to the two relay outputs, this board has one thermistor input.

The boards you wish to have installed in your frequency converter have to be defined in the type designation code of the frequency converter when ordering it from the factory.

Table 4. Vacon NX Basic boards and their equipment

FC type	I/O board	Allowed slots	DI	DO	AI	AO	RO	TI	Other
NXS NXP	OPTA1	A	6	1	2 (mA/V), incl. -10...+10V	1 (mA/V)			+10Vref +24V/ EXT+24V
NXS NXP	OPTA2	B					2 (NO/NC)		
NXS NXP	OPTA3	B					1 (NO/NC) + 1 NO	1	
NXS[1)] NXP	OPTA4	C	3 DI encoder (RS-422) + 2 DI (qualifier & fast input)						+5V/+15V/+24V (progr.)
NXS[1)] NXP	OPTA5	C	3 DI encoder (wide range) + 2 DI (qualifier & fast input)						+15V/+24V (progr.)
NXP	OPTA7	C	6 (enc.)	2 (enc)					+15V/+24V (progr.)
NXS NXP	OPTA8	A	6	1	2 (mA/V), incl. -10...+10V (decoupled from GND)	1 (mA/V) (decoupled from GND)			+10Vref (decoupled from GND) +24V/ EXT+24V
NXS NXP	OPTA9	A	6	1	2 (mA/V), incl. -10...+10V	1 (mA/V)			+10ref (2,5 mm terminals) +24V/ EXT+24V
NXS[1)] NXP	OPTAE	C	3 DI encoder (wide range)	2 (Enc.)					+15V/+24V (progr.)
NXS NXP	OPTAL	A	6 42...240 VAC	1	2 (AI1 0-10V) (AI2 +-10V)	2 (AO1 mA) (AO2 V)			+15V/+24V
NXP	OPTAN	A	6		2 (mA/V), incl. -10...+10V	2 (mA/V), incl. -10...+10V			+10Vref -10Vref +24V/ EXT+24V

[1)] Encoder board can be used in Vacon NXS with special applications only.

DI = Digital input DO = Digital output TI = Thermistor input

AI = Analogue input AO = Analogue output RO = Relay output

Artisan Technology Group - Quality Instrumentation ... Guaranteed | (888) 88-SOURCE | www.artisantg.com

3.1.1 OPTA1

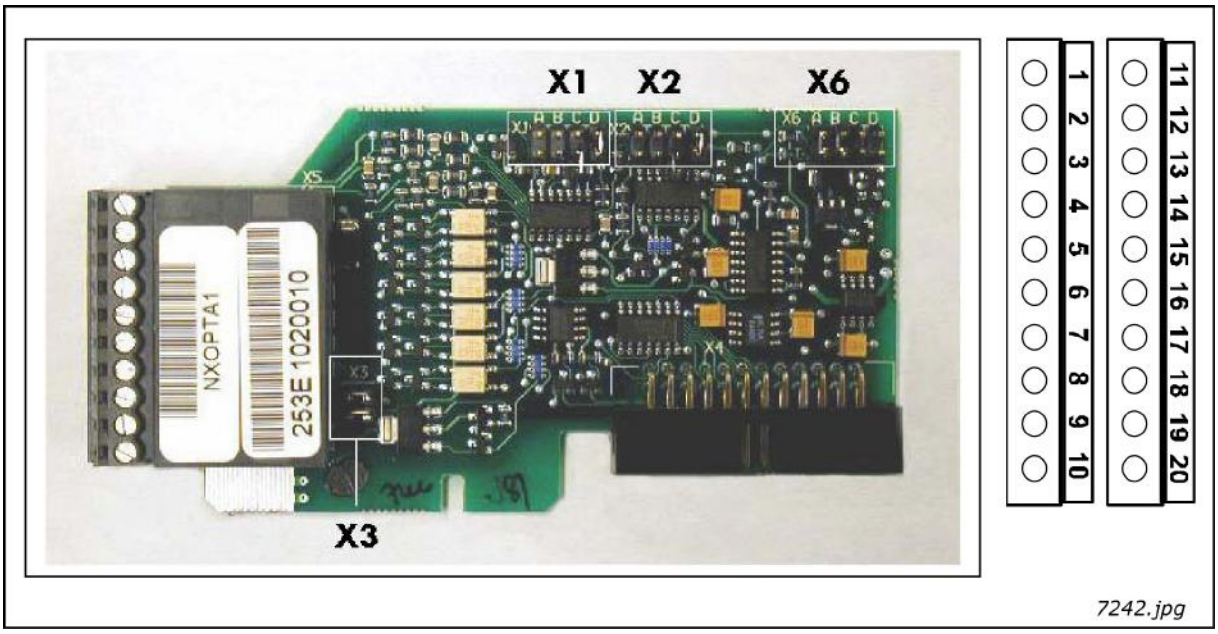

Figure 11. Vacon OPTA1 option board

Description:	Standard I/O board with digital inputs/outputs and analogue inputs/outputs
Allowed slots:	A
Type ID:	16689
Terminals:	Two terminal blocks (coded = mounting of blocks in wrong order prevented, terminals #1 and #12); Screw terminals (M2.6)
Jumpers:	4; X1, X2, X3 and X6 (See Figure 12)
Board parameters:	Board parameters:Yes (See page 22)

Tel. +358 (0) 201 2121 • Fax +358 (0)201 212 205
Artisan Technology Group - Quality Instrumentation ... Guaranteed | (888) 88-SOURCE | www.artisantg.com

I/O terminals on OPTA1 (coded terminals painted black)

Table 5. OPTA1 I/O terminals

Terminal		Parameter reference on keypad and NCDrive	Technical information
1	+10 Vref		Reference output +10V; Maximum current 10 mA
2	AI1+	An.IN:A.1	Selection V or mA with jumper block X1 (see page 21): Default: 0– +10V (Ri = 200 kΩ) (-10V..+10V Joy-stick control, selected with ajumper) 0– 20mA (Ri = 250 Ω) Resolution 0.1%; Accuracy ±1% Differential input if not connected to ground; Allows ±20V differential mode voltage to GND
3	AI1–		
4	AI2+	An.IN:A.2	Selection V or mA with jumper block X2 (see page 21): Default: 0– 20mA (Ri = 250 Ω) 0– +10V (Ri = 200 kΩ) (-10V..+10V Joy-stick control, selected with a jumper) Resolution: 0.1%; Accuracy ±1% Differential input if not connected to ground; Allows ±20V differential mode voltage to GND
5	AI2–		
6	24 Vout (bi-directional)		24V auxiliary voltage output. Short-circuit protected. ±15%, maximum current 150 mA, see 1.4.4. +24Vdc external supply may be connected. Galvanically connected to terminal #12.
7	GND		Ground for reference and controls Galvanically connected to terminals #13,19.
8	DIN1	DigIN:A.1	Digital input 1 (Common CMA); R_i = min. 5kΩ
9	DIN2	DigIN:A.2	Digital input 2 (Common CMA); R_i = min. 5kΩ
10	DIN3	DigIN:A.3	Digital input 3 (Common CMA); R_i = min. 5kΩ
11	CMA		Digital input common A for DIN1, DIN2 and DIN3. Connection by default to GND. Selection with jumper block X3 (see page 21):
12	24 Vout (bi-directional)		Same as terminal #6 Galvanically connected to terminal #6.
13	GND		Same as terminal #7 Galvanically connected to terminals #7 and 19
14	DIN4	DigIN:A.4	Digital input 4 (Common CMB); R_i = min. 5kΩ
15	DIN5	DigIN:A.5	Digital input 5 (Common CMB); R_i = min. 5kΩ
16	DIN6	DigIN:A.6	Digital input 6 (Common CMB); R_i = min. 5kΩ
17	CMB		Digital input common B for DIN4, DIN5 and DIN6. Connection by default to GND. Selection with jumper block X3 (see page 21):
18	AO1+	AnOUT:A.1	Analogue output Output signal range: Current 0(4)–20mA, R_L max 500Ω or Voltage 0—10V, R_L >1kΩ Selection with jumper block X6 (see page 21): Resolution: 0.1% (10 bits); Accuracy ±2%
19	AO1–		
20	DO1	DigOUT:A.1	Open collector output Maximum U_{in} = 48VDC Maximum current = 50 mA

Artisan Technology Group - Quality Instrumentation ... Guaranteed | (888) 88-SOURCE | www.artisantg.com

Jumper selections

There are four jumper blocks on the OPTA1 board. The factory defaults and other available jumper selections are presented below.

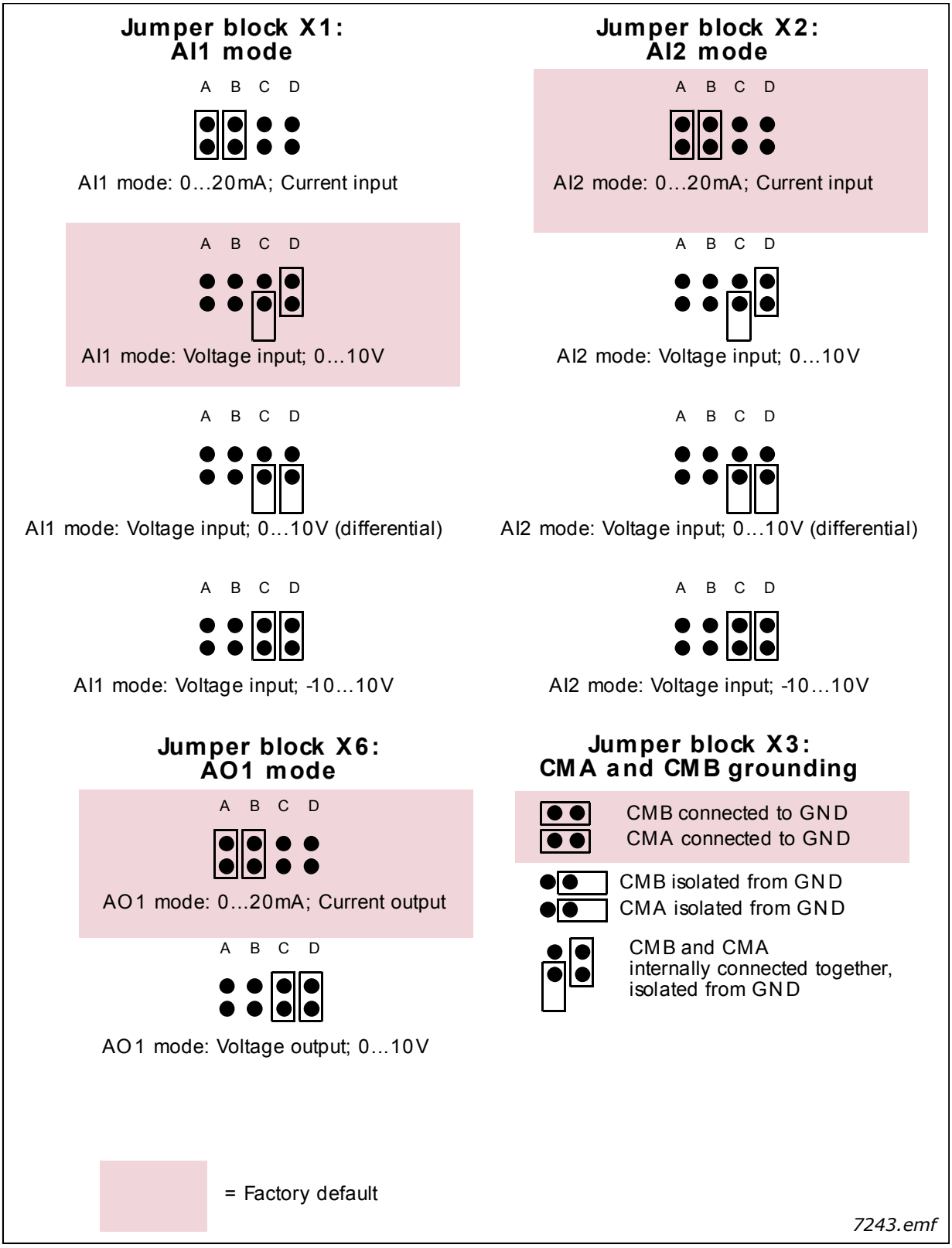

Figure 12. Jumper block selection on OPTA1

Tel. +358 (0) 201 2121 • Fax +358 (0)201 212 205
Artisan Technology Group - Quality Instrumentation ... Guaranteed | (888) 88-SOURCE | www.artisantg.com

OPTA1 parameters

Table 6. OPTA1 board-related parameters

Number	Parameter	Min	Max	Default	Note
1	AI1 mode	1	5	3	1 = 0...20mA 2 = 4...20mA 3 = 0...10V 4 = 2...10V 5 = -10...+10V
2	AI2 mode	1	5	1	1 = 0...20mA 2 = 4...20mA 3 = 0...10V 4 = 2...10V 5 = -10...+10V
3	AO1 mode	1	4	1	1 = 0...20mA 2 = 4...20mA 3 = 0...10V 4 = 2...10V

Artisan Technology Group - Quality Instrumentation ... Guaranteed | (888) 88-SOURCE | www.artisantg.com

3.1.2 OPTA2

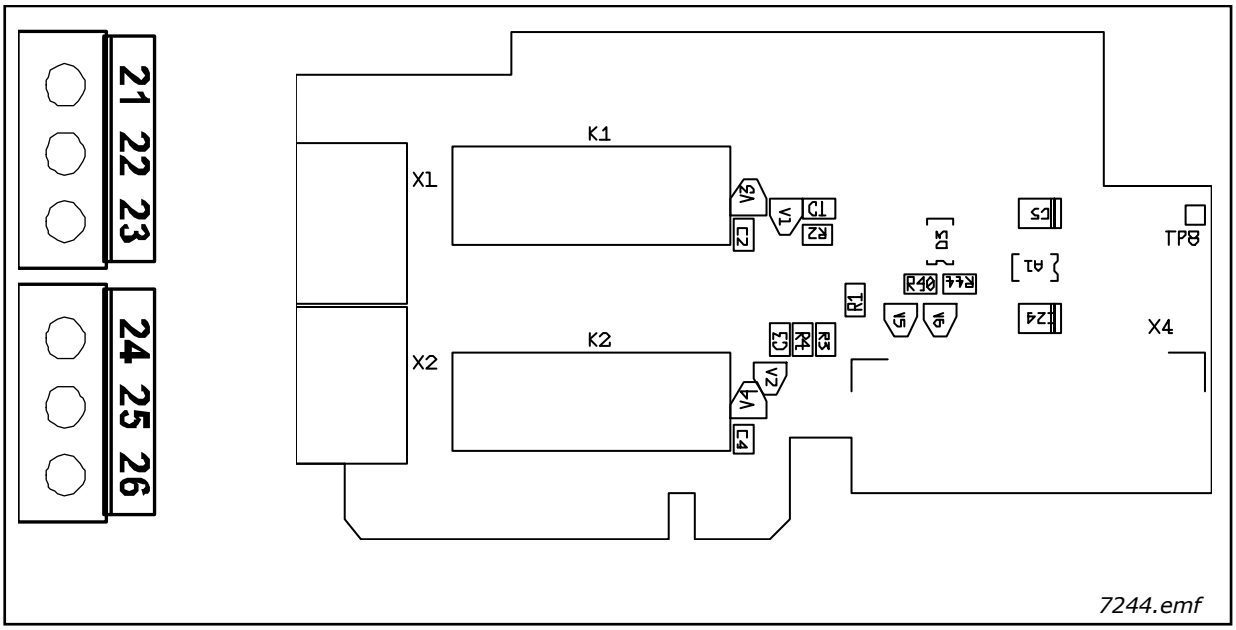

Description:	Standard Vacon NX frequency converter relay board with two relay outputs
Allowed slots:	B
Type ID:	16690
Terminals:	Two terminal blocks; Screw terminals (M3); No coding
Jumpers:	None
Board parameters:	None

I/O terminals on OPTA2

Table 7. OPTA2 I/O terminals

Terminal		Parameter reference on keypad and NCDrive	Technical information
21 22 23	RO1/normal closed RO1/common RO1/normal open	DigOUT:B.1	Relay output 1 (NO/NC) Switching capacity 24VDC/8A 250VAC/8A 125VDC/0.4A Min. switching load 5V/10mA
24 25 26	RO2/normal closed RO2/common RO2/normal open	DigOUT:B.2	Relay output 2 (NO/NC) Switching capacity 24VDC/8A 250VAC/8A 125VDC/0.4A Min. switching load 5V/10mA

Tel. +358 (0) 201 2121 • Fax +358 (0)201 212 205
Artisan Technology Group - Quality Instrumentation ... Guaranteed | (888) 88-SOURCE | www.artisantg.com

3.1.3 OPTA3

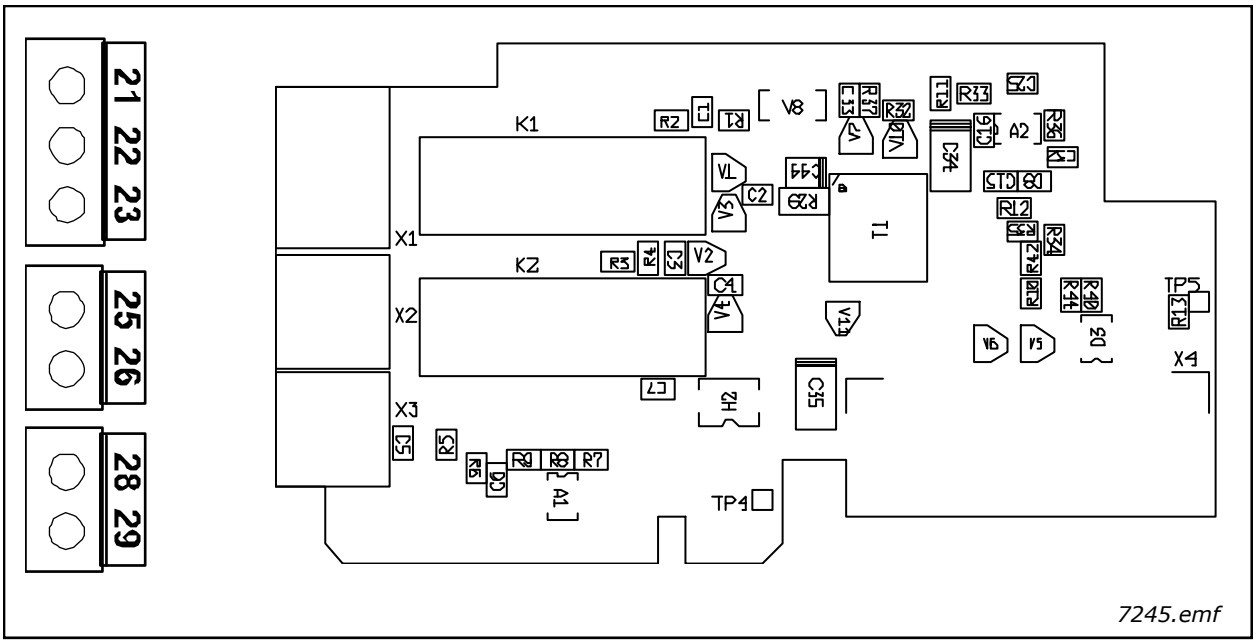

Description:	Relay board with two relay outputs and one thermistor input for Vacon NX frequency converter
Allowed slots:	B
Type ID:	16691
Terminals:	Three terminal blocks; Screw terminals (M3); No coding.
Jumpers:	None
Board parameters:	None

I/O terminals on OPTA3

Table 8. OPTA3 I/O terminals

Terminal		Parameter reference on keypad and NCDrive	Technical information
21 22 23	RO1/normal closed RO1/common RO1/normal open	DigOUT:B.1	Relay output 1 (NO/NC) Switching capacity 24VDC/8A 250VAC/8A 125VDC/0.4A Min. switching load 5V/10mA
25 26	RO2/common RO2/normal open	DigOUT:B.2	Relay output 2 (NO) Switching capacity 24VDC/8A 250VAC/8A 125VDC/0.4A Min. switching load 5V/10mA
28 29	TI1+ TI1–	DigIN:B.1	Thermistor input; R_{trip} = 4.7 kΩ (PTC)

Artisan Technology Group - Quality Instrumentation ... Guaranteed | (888) 88-SOURCE | www.artisantg.com

3.1.4 OPTA4

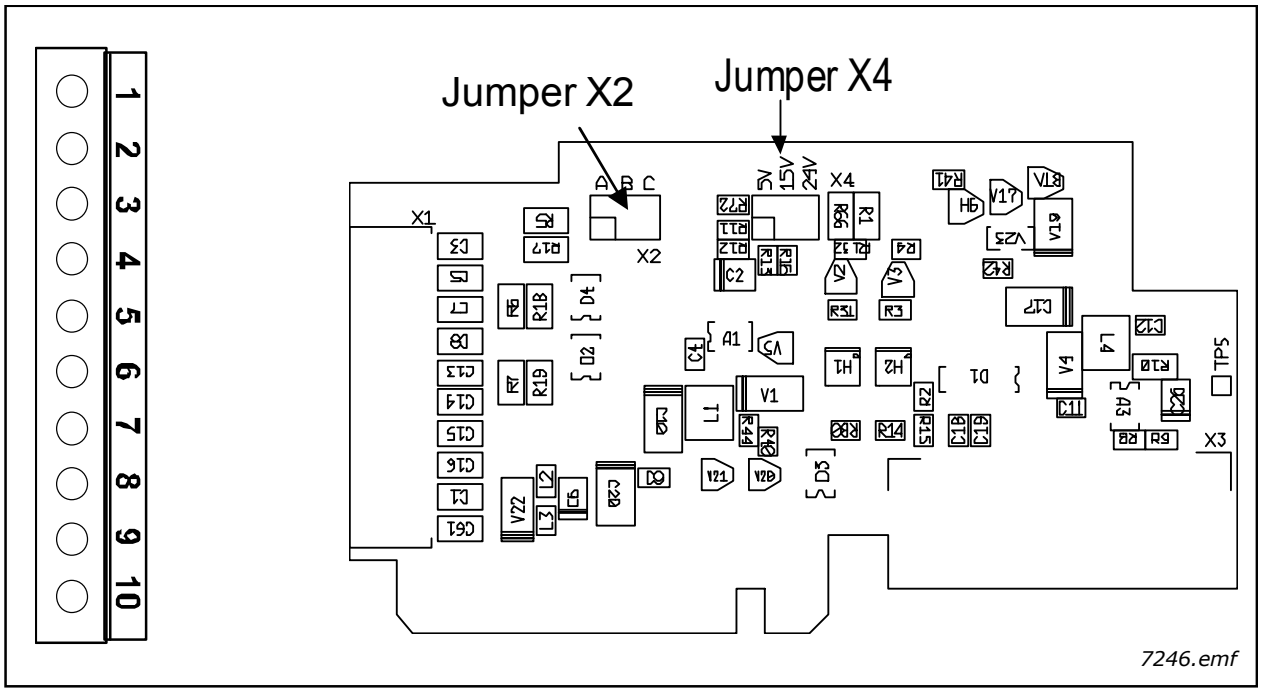

Description: Encoder board for Vacon NXP. Encoder input board with programmable control voltage for an encoder.

The encoder board OPTA4 is for TTL type encoders (TTL, TTL(R)) providing input signal levels that meet the RS_422 interface standard. Encoder inputs A, B and Z are not galvanically isolated. The OPTA4 board includes, too, the qualifier input ENC1Q (meant to trace the Z-pulse in certain situations) and a special/fast digital input DIC4 (used to trace very short pulses). These two inputs are used in special applications.

The TTL type encoders do not have an internal regulator and use therefore a supply voltage of +5V±5% whereas the TTL(R) type encoders have an internal regulator and the supply voltage can be e.g. +15V±10% (depending on the encoder manufacturer).

Allowed slots: C

Type ID: 16692

Terminals: One terminal block; Screw terminals (M2.6); Coding in terminal #3.

Jumpers: 2; X4 and X2 (see page 26)

Board parameters: Yes (see page 27)

Tel. +358 (0) 201 2121 • Fax +358 (0)201 212 205

Artisan Technology Group - Quality Instrumentation ... Guaranteed | (888) 88-SOURCE | www.artisantg.com

I/O terminals on OPTA4 (coded terminal painted black)

Table 9. OPTA4 I/O terminals

Terminal		Parameter reference Keypad/NCDrive	Technical information
1	DIC1A+		Pulse input A
2	DIC1A–		
3	DIC2B+		Pulse input B; phase shift of 90 degrees compared to Pulse input A
4	DIC2B–		
5	DIC3Z+		Pulse input Z; one pulse per revolution
6	DIC3Z–		
7	ENC1Q		Reserved for future use
8	DIC4		Reserved for future use
9	GND		Ground for control and inputs ENC1Q and DIC4
10	+5V/+15V/+24V		Control voltage (auxiliary voltage) output to encoder; Output voltage selectable with jumper X4. See chapter 1.4.4.

Technical data:

Encoder control voltage, +5V/+15V/+24V	Control voltage selectable with jumper X4.
Encoder input connections, inputs A+, A–, B+, B–, Z+, Z–	Max. input frequency ≤150kHz Inputs A, B and Z are differential Encoder inputs are RS-422 interface compatible Max. load per encoder input $I_{low} = I_{high} \approx 25mA$
Qualifier input ENC1Q Fast digital input DIC4	Max. input frequency ≤10kHz Min. pulse length 50µs Digital input 24V; R_i>5kΩ Digital input is single-ended; connected to GND

Jumper selections

On the OPTA4 board, there are two jumper blocks. The jumper X2 is used to define the status of the termination resistor (R=135Ω). The jumper X4 is used to program the control voltage (auxiliary voltage). The factory default and other available jumper selections are presented below.

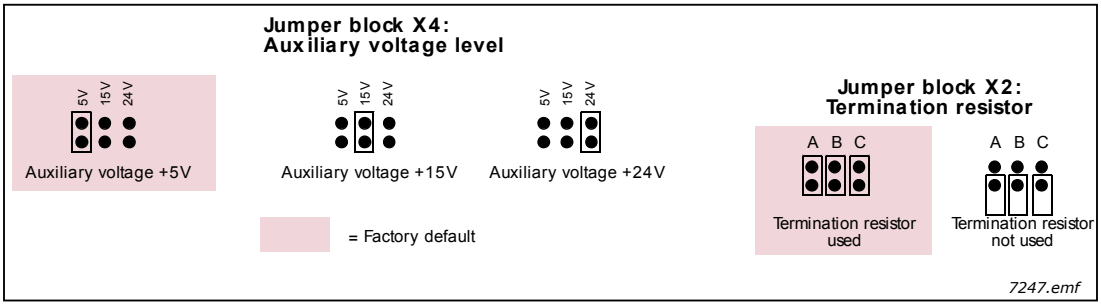

NOTE: If one encoder is connected to one drive only, the termination resistor on the board must be used. If the encoder is connected to several drives, the termination resistor of the last drive must be used.

Artisan Technology Group - Quality Instrumentation ... Guaranteed | (888) 88-SOURCE | www.artisantg.com

Encoder connection – Differential

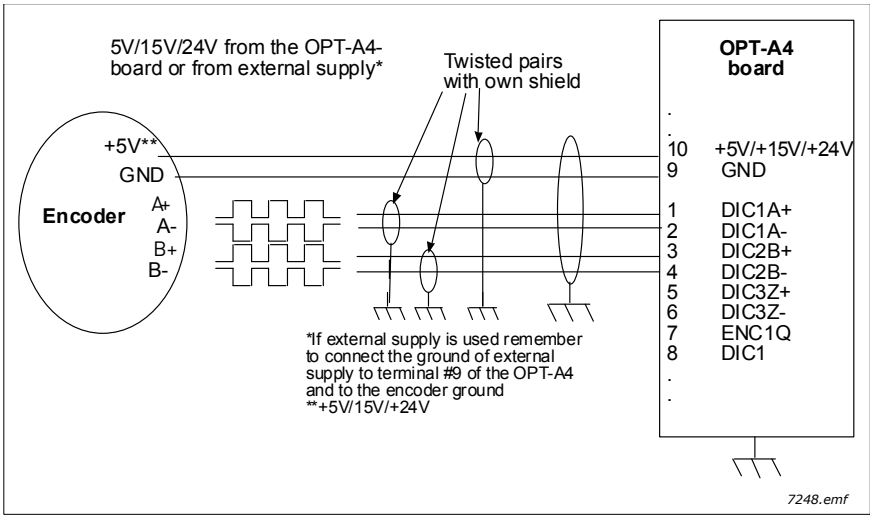

Figure 13. RS-422 type encoder connection using differential inputs

NOTE:
The encoder pulses are handled by Vacon software as presented below:

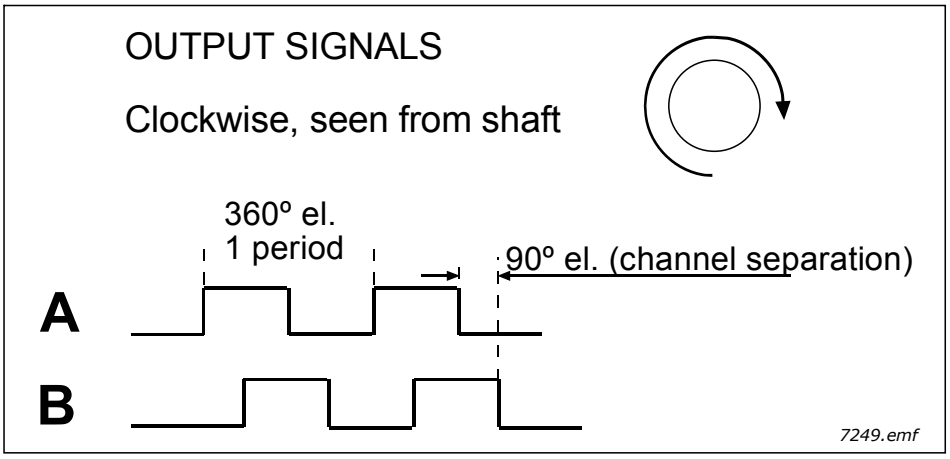

OPTA4 parameters

Table 10. OPTA4 board-related parameters

Number	Parameter	Min	Max	Default	Note
7.3.1.1	Pulse/revolution	1	65535	1024	
7.3.1.2	Invert direction	0	1	0	0 = No 1 = Yes
7.3.1.3	Reading rate	0	4	1	Time used to calculate speed actual value. NOTE: Use value 1 in Closed Loop mode. 0 = No 1 = 1 ms 2 = 5 ms 3 = 10 ms 4 = 50 ms
7.3.1.4	Encoder type	1	3	1	1 = A,B = speed 2 = A = REF, B = DIR 3 = A= FORW, B = REV

Tel. +358 (0) 201 2121 • Fax +358 (0)201 212 205
Artisan Technology Group - Quality Instrumentation ... Guaranteed | (888) 88-SOURCE | www.artisantg.com

Par 7.3.1.4 Encoder Type (can be selected with boards A4, A5 and A7 (encoder 2 mode))

1 = A, B = Speed

Only with this input type it is possible to use Closed Loop speed control in an NXP drive. NXS drives do not have Closed Loop possibility, but encoder signal can be used e.g. for reference or positioning.
This input mode requires that both channels A and B are receiving pulses, differential connection is recommended.

Direction of speed is determined from 90° difference in signals.

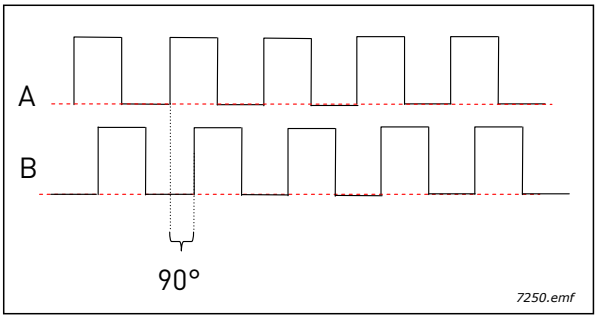

2 = A = Ref, B = Dir

This type can not be used for Closed Loop control!
In this mode only channel A is receiving pulses. Channel B will determine if direction is negative or positive. Input in channel B must be static signal.

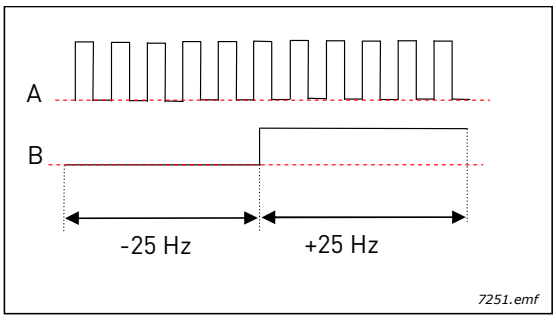

3 = A = Forw, B = Rev

This type can not be used for Closed Loop control!
In this mode both channels are receiving signal but not at the same time.
Pulses on channel A means positive direction.
Pulses on channel B means negative direction.

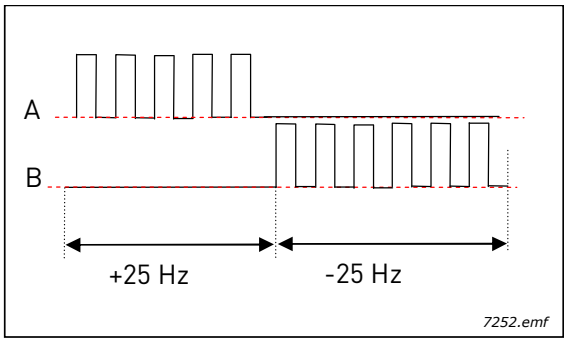

Artisan Technology Group - Quality Instrumentation ... Guaranteed | (888) 88-SOURCE | www.artisantg.com

3.1.5 OPTA5

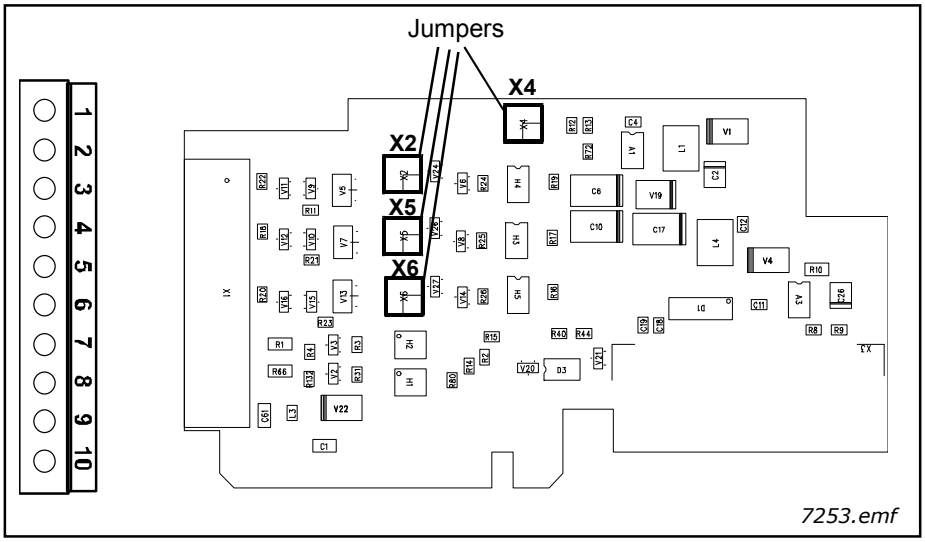

Description: Encoder board for Vacon NXP. Encoder input board with programmable control voltage for an encoder.

The OPTA5 board is designed for HTL (High voltage Transistor Logic) type encoders (voltage output type push-pull HTL, open collector output type HTL) which provide input signal levels dependent on the supply voltage of the encoder. The encoder inputs A, B and Z are galvanically isolated. The OPTA5 board includes, too, the qualifier input ENC1Q (meant to trace the Z-pulse in certain situations) and a fast digital input DIC4 (used to trace very short pulses). These two inputs are used in special applications.

The OPTA5 is similar to the OPTA4 in connections but the encoder inputs A, B and Z have different signal levels (voltage level). The input levels for A, B and Z of the OPTA4 are compatible with RS-422 while those of the OPTA5 are more general wide range inputs. Inputs ENC1Q and DIC4 are identical in both boards.

Allowed slots: C

Type ID: 16693

Terminals: One terminal block; Screw terminals (M2.6); Coding in terminal #3.

Jumpers: 4; X2, X4, X5, X6 (see page 31)

Board parameters: Yes (see page 27)

Tel. +358 (0) 201 2121 • Fax +358 (0)201 212 205

Artisan Technology Group - Quality Instrumentation ... Guaranteed | (888) 88-SOURCE | www.artisantg.com

I/O terminals on OPTA5 (coded terminal painted black)

Table 11. OPTA5 I/O terminals

Terminal		Parameter reference Keypad/NCDrive	Technical information
1	DIC1A+		Pulse input A (differential); Voltage range 10...24V
2	DIC1A–		
3	DIC2B+		Pulse input B; phase shift of 90 degrees compared to Pulse input A (differential); Voltage range 10...24V
4	DIC2B–		
5	DIC3Z+		Pulse input Z; one pulse per revolution (differential); Voltage range 10...24V
6	DIC3Z–		
7	ENC1Q		Reserved for future use
8	DIC4		Reserved for future use
9	GND		Ground for control and inputs ENC1Q and DIC4
10	+15V/+24V		Control voltage (auxiliary voltage) output to encoder; Output voltage selectable with jumper X4. See chapter 1.4.4.

NOTE: Encoder inputs are wide range inputs that can be used with encoders using +15V or +24V.

Technical data:

Encoder control voltage, +15V/+24V	Control voltage selectable with jumper X4.
Encoder input connections, inputs A+, A–, B+, B–, Z+, Z–	Max. input frequency ≤150kHz Inputs A, B and Z are differential
Qualifier input ENC1Q Fast digital input DIC4	Max. input frequency ≤10kHz Min. pulse length 50µs Digital input 24V; R_i>5kΩ Digital input is single-ended; connected to GND

NOTE: A high pulse frequency combined with a great cable capacitance places a considerable load on the encoder. Apply therefore as low a voltage as possible for the encoder supply, rather lower than 24V. The manufacturer also recommends to place jumper X4 to position +15V, if allowed in the voltage range specification of the encoder.

Artisan Technology Group - Quality Instrumentation ... Guaranteed | (888) 88-SOURCE | www.artisantg.com

Jumper selections

On the OPTA5 board, there are four jumper blocks; X4 is used to program the control voltage (auxiliary voltage), X2, X5 and X6 are set according the voltage of the encoder. The factory default and other available jumper selections are presented below.

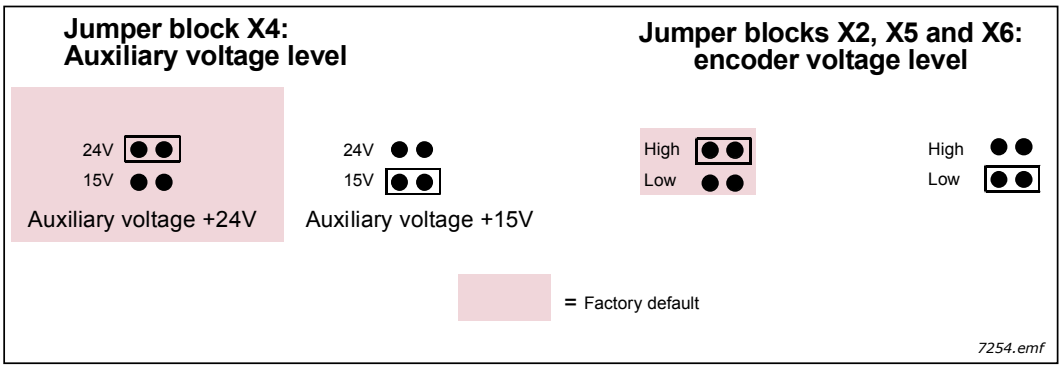

Jumper blocks X2, X5 and X6:
When these jumpers are set to High (default and typically good for 24V encoders), it means that when the voltage at the channel goes above 8V, it will acknowledge a new pulse.

When they are set to Low = 2.3 V, it means that when the voltage at the channel goes above 2.3V, it will acknowledge a new pulse.

Usage: Closed Loop Vector Control. The OPTA5 board is mainly used in conventional industrial applications where encoder cable lengths are relatively long.

Encoder connection – Differential

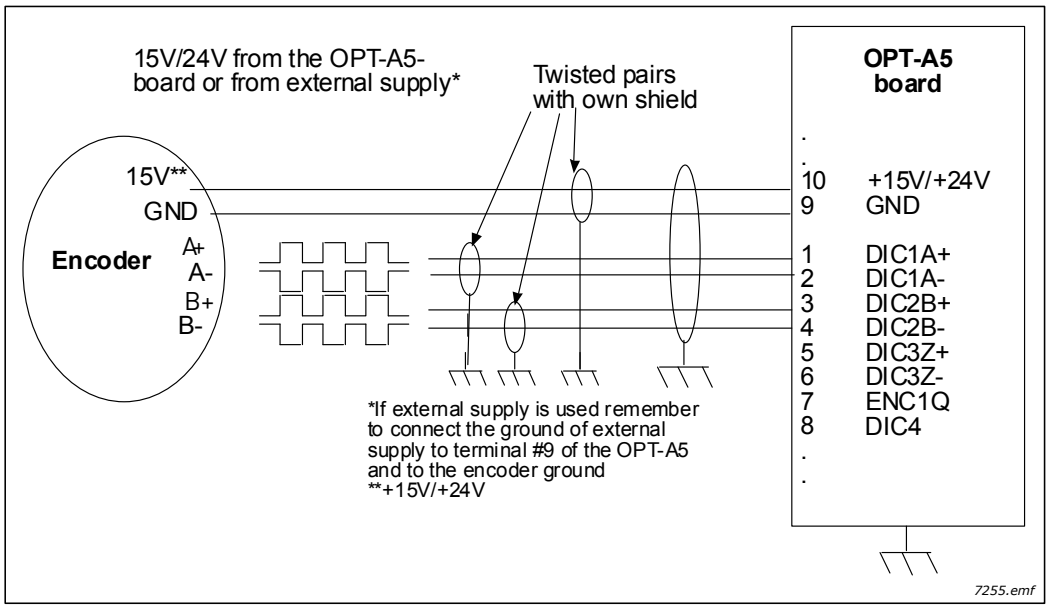

Figure 14. HTL type encoder connection using differential inputs

Tel. +358 (0) 201 2121 • Fax +358 (0)201 212 205
Artisan Technology Group - Quality Instrumentation ... Guaranteed | (888) 88-SOURCE | www.artisantg.com

Encoder connection – Single-ended

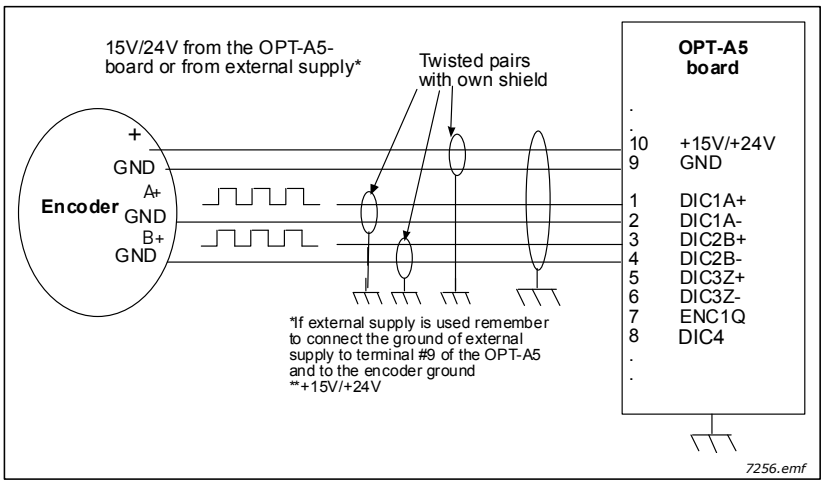

Figure 15. HTL type encoder connection (open source) using single-ended inputs

NOTE! Grounding is to be connected only at the frequency converter to avoid circulating current in the shield. Isolate shield at the encoder.

It is recommended to use double shielded cable for encoder connection.

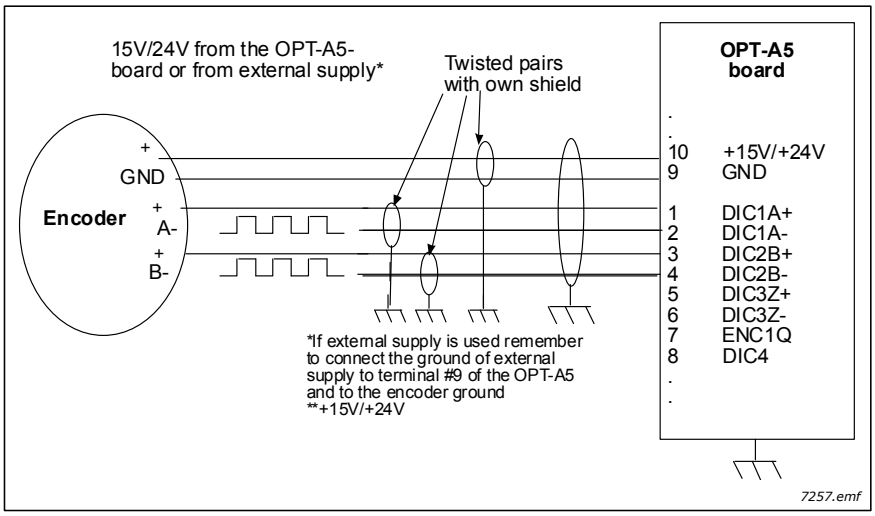

Figure 16. HTL type encoder connection (open collector) using single-ended inputs

NOTE! Grounding is to be connected only at the frequency converter to avoid circulating current in the shield. Isolate shield at the encoder.

It is recommended to use double shielded cable for encoder connection.

OPTA5 parameters

See page 27 and 28.

Artisan Technology Group - Quality Instrumentation ... Guaranteed | (888) 88-SOURCE | www.artisantg.com

3.1.6 OPTA7

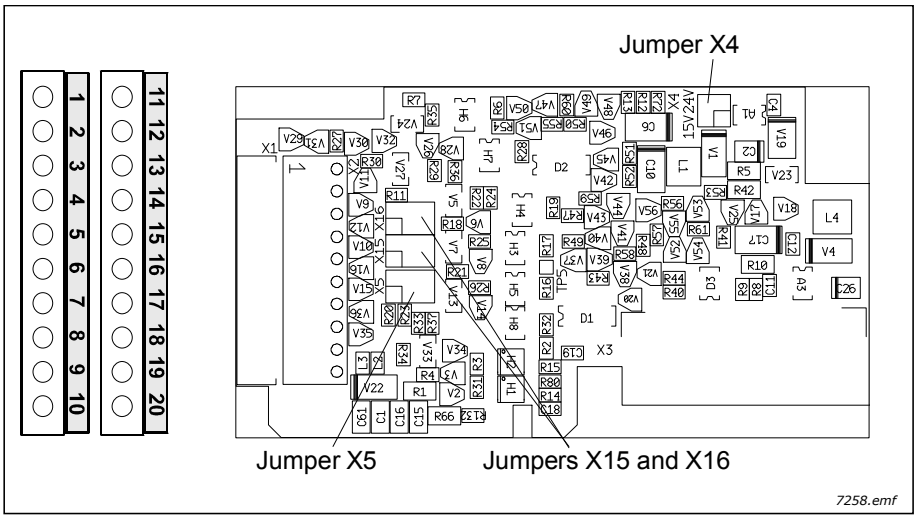

Description: Duplicate encoder board for Vacon NXP. Encoder input board with programmable control voltage for the encoder.

The OPTA7 board is designed for HTL (High voltage Transistor Logic) type encoders (voltage output type push-pull HTL, open collector output type HTL) which provide input signal levels dependent on the supply voltage of the encoder. The encoder inputs A, B and Z are galvanically isolated. The OPTA7 board includes, too, the qualifier inputs ENC1Q and ENC2Q meant to trace positions in positioning applications.

The board can be used as both *Master* and *Slave* device. The encoder input signal is repeated on the board and carried to the next device through the digital output.

Allowed slots: C

Type ID: 16695

Terminals: Two terminal blocks; Screw terminals (M2.6); Coding in terminals #3 and #14.

Jumpers: 4; X4, X5, X15 and X16 (see page 35)

Board parameters: Yes, see page 37.

Tel. +358 (0) 201 2121 • Fax +358 (0)201 212 205

Artisan Technology Group - Quality Instrumentation ... Guaranteed | (888) 88-SOURCE | www.artisantg.com

I/O terminals on OPTA7

Table 12. OPTA7 I/O terminals

Terminal		Parameter reference Keypad/NCDrive	Technical information
1	DIC1A+		Pulse input A (differential); Voltage range 10...24V
2	DIC1A–		
3	DIC2B+		Pulse input B; phase shift of 90 degrees compared to Pulse input A (differential); Voltage range 10...24V
4	DIC2B–		
5	DIC3Z+		Pulse input Z; one pulse per revolution (differential); Voltage range 10...24V
6	DIC3Z–		
7	ENC1Q		Qualifier input. Single-ended input with GND
8	ENC2Q		Qualifier input. Single-ended input with GND
9	GND		Ground for control and inputs ENC1Q and ENC2Q
10	+15V/+24V		Control voltage (auxiliary voltage) output to encoder; Output voltage selectable with jumper X4.
11	DID1A+		Pulse input A (differential input), voltage range 10...24V
12	DID1A–		
13	DID2B+		Pulse input B; 90 degrees phase shift compared to the pulse input A (differential input), voltage range 10...24V
14	DID2B–		
15	DID3Z+		Pulse input Z; one pulse per revolution (differential input), voltage range 10...24V
16	DID3Z–		
17	DOD1A+		Pulse output A (differential), output voltage +24V. Pulse input DIC1A or DID1A is internally repeated in the card and connected to the DOD1A output.
18	DOD1A–		
19	DOD2B+		Pulse output B (differential), output voltage +24V. Pulse input DIC2A or DID2A is internally repeated in the card and connected to the DOD2A output.
20	DOD2B–		

NOTE: Encoder inputs are wide range inputs that can be used with encoders using +15V or +24V.

Technical data:

Artisan Technology Group - Quality Instrumentation ... Guaranteed | (888) 88-SOURCE | www.artisantg.com

Encoder control voltage, +15V/+24V	Control voltage selectable with jumper X4.
Encoder input connections, inputs A+, A–, B+, B–, Z+, Z–	Max. input frequency ≤150kHz Inputs A, B and Z are differential
Qualifier input ENC1Q Fast digital input DIC1	Max. input frequency ≤10kHz Min. pulse length 50µs Digital input 24V; R_i>5kΩ Digital input is single-ended; connected to GND

NOTE: A high pulse frequency combined with a great cable capacitance places a considerable load on the encoder. Apply therefore as low a voltage as possible for the encoder supply, rather lower than 24V. The manufacturer also recommends to place jumper X4 to position +15V, if allowed in the voltage range specification of the encoder.

Jumper selections

On the OPTA7 board, there are four jumper blocks.

Jumper X4 is used to program the control voltage (auxiliary voltage).

The setting of jumper X5 defines the encoder channel (DIC/DID) used to carry the signal to the repeater.

The setting of jumpers X15 and X16 is changed according to whether the board is used as a *Master* or *Slave* device.

The factory default and other available jumper selections are presented below.

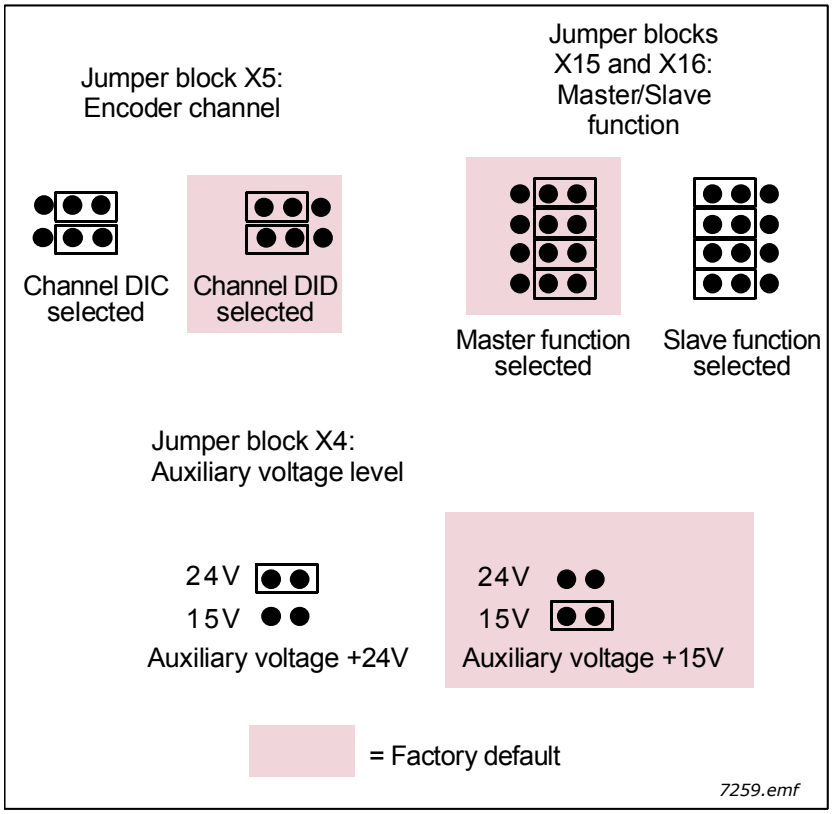

Usage: Closed Loop Vector Control, positioning applications. The OPTA7 encoder board is mainly used in demanding system applications, e.g. when measuring the motor speed with two encoders.

Encoder connection

Tel. +358 (0) 201 2121 • Fax +358 (0)201 212 205

Artisan Technology Group - Quality Instrumentation ... Guaranteed | (888) 88-SOURCE | www.artisantg.com

The figures below present examples of a chain connection of several OPTA7 boards (Figure 17) and a connection of two encoders to the OPTA7 option board (Figure 18).

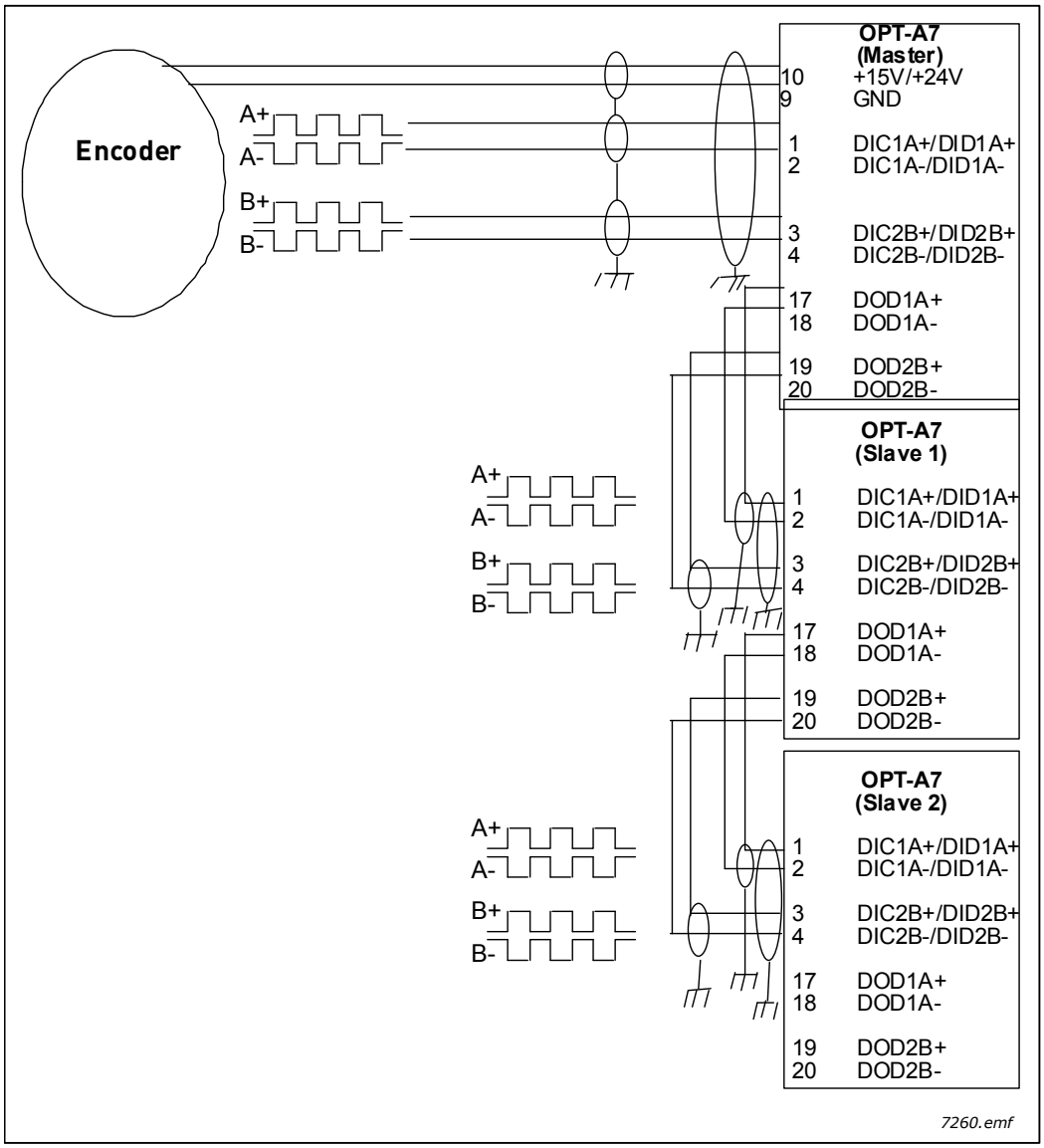

Figure 17. Connection of encoder and three OPTA7 boards

Artisan Technology Group - Quality Instrumentation ... Guaranteed | (888) 88-SOURCE | www.artisantg.com

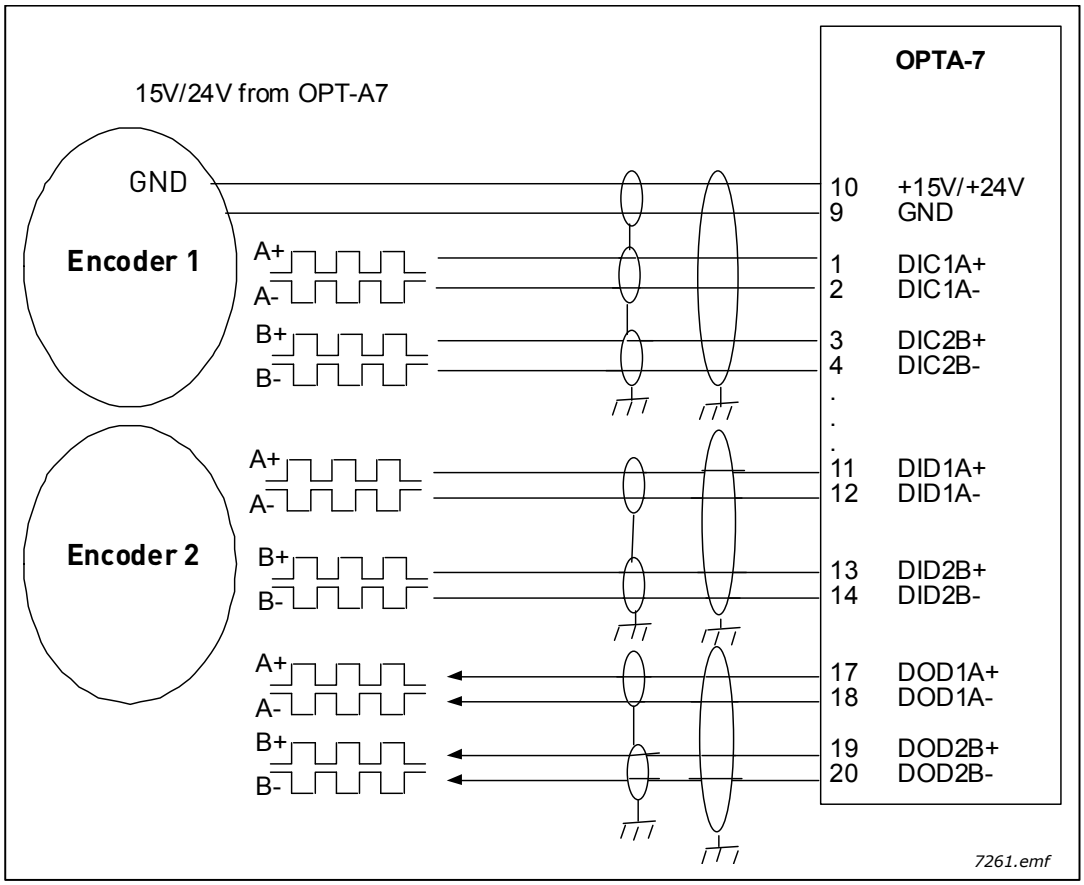

Figure 18. Connection of two encoders to OPTA7 board

OPTA7 parameters

Table 13. OPTA7 parameters

Number	Parameter	Min	Max	Default	Note
7.3.1.1	Encoder 1 Pulse/revolution	0	65535	1024	
7.3.1.2	Invert encoder 1 direction	0	1	0	0 = No 1 = Yes
7.3.1.3	Reading rate	0	4	1	Time used to calculate speed actual value. **NOTE:** Use value 1 in Closed Loop mode. 0 = No 1 = 1 ms 2 = 5 ms 3 = 10 ms 4 = 50 ms
7.3.1.4	Encoder 2 Pulse/revolution	0	65535	1024	
7.3.1.5	Encoder 2 type	1	3	1	1 = A,B = speed 2 = A = REF, B = DIR 3 = A= FORW, B = REV See page 28 for explanations!

Tel. +358 (0) 201 2121 • Fax +358 (0)201 212 205
Artisan Technology Group - Quality Instrumentation ... Guaranteed | (888) 88-SOURCE | www.artisantg.com

OPTA7 monitoring values

Table 14. OPTA7 monitoring values

Number	Monitored value	Unit	Description
Mon 7.3.2.1	Encoder 1 frequency	Hz	Motor speed in Hz calculated from encoder 1 pulses
Mon 7.3.2.2	Encoder 1 speed	rpm	Motor speed in rpm calculated from encoder 1 pulses
Mon 7.3.2.3	Encoder 2 frequency	Hz	Motor speed in Hz calculated from encoder 2 pulses
Mon 7.3.2.4	Encoder 2 speed	rpm	Motor speed in rpm calculated from encoder 2 pulses

Artisan Technology Group - Quality Instrumentation ... Guaranteed | (888) 88-SOURCE | www.artisantg.com

3.1.7 OPTA8

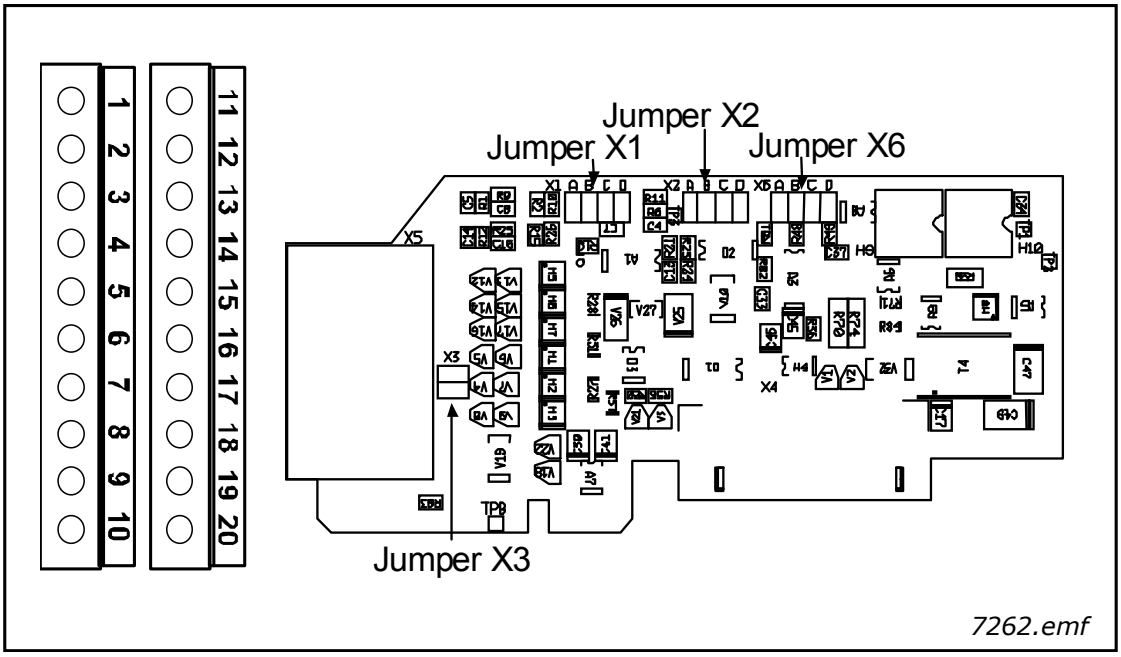

Description:	Vacon NX basic I/O board similar to OPTA1 except that the analogue inputs and output are galvanically isolated.
Allowed slots:	A
Type ID:	16696
Terminals:	Two terminal blocks; Screw terminals (M2.6); Coding in terminals #1 and #12.
Jumpers:	4; X1, X2, X3 and X6 (see page 41)
Board parameters:	Yes (see page 42)

Tel. +358 (0) 201 2121 • Fax +358 (0)201 212 205
Artisan Technology Group - Quality Instrumentation ... Guaranteed | (888) 88-SOURCE | www.artisantg.com

I/O terminals on OPTA8 (coded terminals painted black)

Table 15. OPTA8 I/O terminals

Terminal		Parameter reference Keypad/NCDrive	Technical information
1	+10 Vref		Refer.output +10V; Max.current 10mA; Decoupled from FC GND
2	AI1+	An.IN:A.1	Selection V or mA with jumper block X1 (see page 41): Default: 0– +10V (Ri = 200 kΩ) (-10V.....+10V Joy-stick control, selected with a jumper) 0– 20mA (Ri = 250 Ω) Resolution 0.1%; Accuracy ±1%
3	AI1– (GND ISOL)		GND ISOL/Voltage input; Connected to GND ISOL (selected with jumper)
4	AI2+	An.IN:A.2	Selection V or mA with jumper block X2 (see page 41): Default: 0– 20mA (Ri = 250 Ω) 0– +10V (Ri = 200 kΩ) (-10V.....+10V Joy-stick control, selected with a jumper)
5	AI2– (GND ISOL)		Resolution: 0.1%; Accuracy ±1% GND ISOL/Voltage input; Connected to GND ISOL (selected with jumper)
6	24 Vout (bidirectional		24V auxiliary voltage output. Short-circuit protected. ±15%, maximum current 150 mA, see 1.4.4. +24Vdc external supply may be connected. Galvanically connected to terminal #12.
7	GND		Ground for reference and controls Galvanically connected to terminal #13.
8	DIN1	DigIN:A.1	Digital input 1 (Common CMA); R_i = min. 5kΩ
9	DIN2	DigIN:A.2	Digital input 2 (Common CMA); R_i = min. 5kΩ
10	DIN3	DigIN:A.3	Digital input 3 (Common CMA); R_i = min. 5kΩ
11	CMA		Digital input common A for DIN1, DIN2 and DIN3. Connection by default to GND. Selection with jumper block X3 (see page 41):
12	24 Vout (bidi-rectional		Same as terminal #6 Galvanically connected to terminal #6.
13	GND		Same as terminal #7 Galvanically connected to terminals #7
14	DIN4	DigIN:A.4	Digital input 4 (Common CMB); R_i = min. 5kΩ
15	DIN5	DigIN:A.5	Digital input 5 (Common CMB); R_i = min. 5kΩ
16	DIN6	DigIN:A.6	Digital input 6 (Common CMB); R_i = min. 5kΩ
17	CMB		Digital input common A for DIN4, DIN5 and DIN6. Connection by default to GND. Selection with jumper block X3 (see page 41):
18	AO1+	AnOUT:A.1	Analogue output Output signal range: Current 0(4)–20mA, R_L max 500Ω or Voltage 0—10V, R_L >1kΩ Selection with jumper block X6 (see page 41): Resolution: 0.1% (10 bits); Accuracy ±2%;
19	AO1–		
20	DO1	DigOUT:A.1	Open collector output; Max. U_{in} = 48VDC; Max. current = 50 mA

Artisan Technology Group - Quality Instrumentation ... Guaranteed | (888) 88-SOURCE | www.artisantg.com

Jumper selections

There are four jumper blocks on the OPTA8 board. The factory defaults and other available jumper selections are presented below.

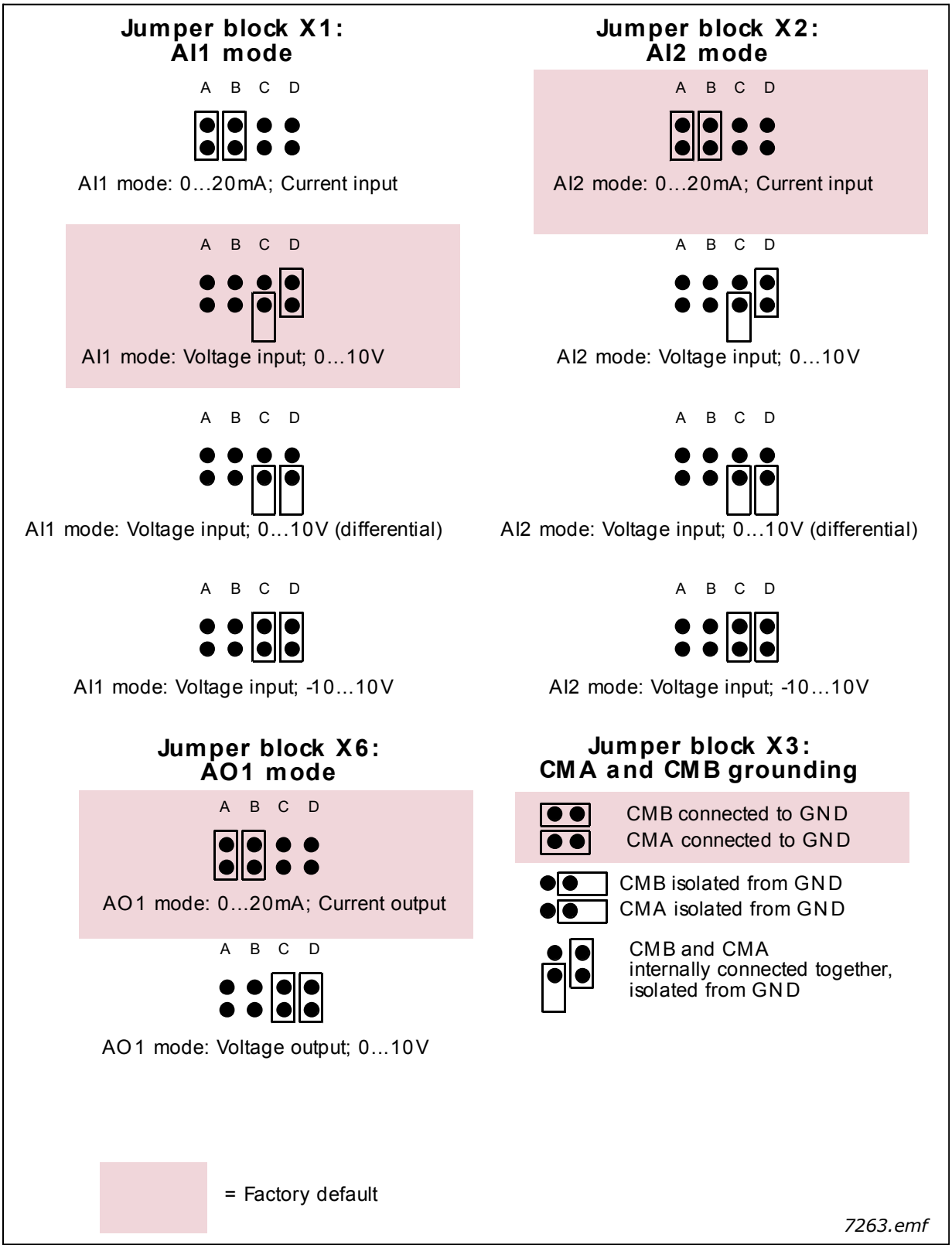

Figure 19. Jumper positions for OPTA8

Tel. +358 (0) 201 2121 • Fax +358 (0)201 212 205
Artisan Technology Group - Quality Instrumentation ... Guaranteed | (888) 88-SOURCE | www.artisantg.com

OPTA8 parameters

Table 16. OPTA8 board-related parameters

Number	Parameter	Min	Max	Default	Note
1	AI1 mode	1	5	3	1 = 0...20mA 2 = 4...20mA 3 = 0...10V 4 = 2...10V 5 = -10...+10V
2	AI2 mode	1	5	1	1 = 0...20mA 2 = 4...20mA 3 = 0...10V 4 = 2...10V 5 = -10...+10V
3	AO1 mode	1	4	1	1 = 0...20mA 2 = 4...20mA 3 = 0...10V 4 = 2...10V

Artisan Technology Group - Quality Instrumentation ... Guaranteed | (888) 88-SOURCE | www.artisantg.com

3.1.8 OPTA9

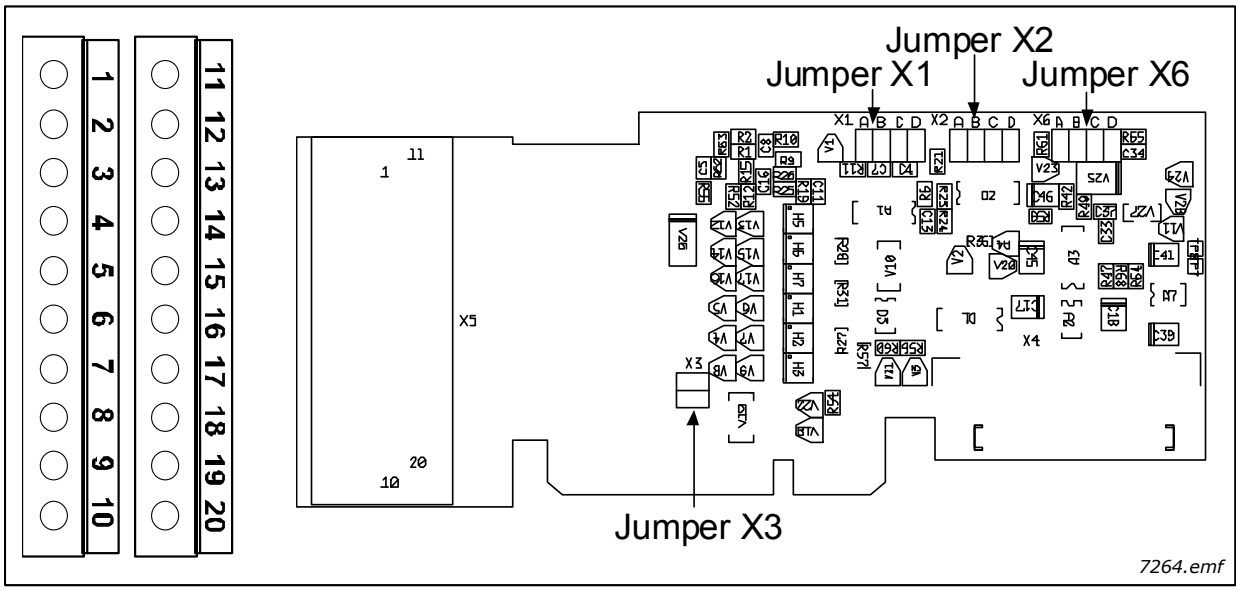

Description:	Vacon NX basic I/O board similar to the OPTA1 except that the I/O terminals are bigger (for 2.5mm^2 wires; M3 screws).
Allowed slots:	A
Type ID:	16697
Terminals:	Two terminal blocks; Screw terminals (M3); Coding in terminals #1 and #12.
Jumpers:	4; X1, X2, X3 and X6 (see page 21)
Board parameters:	Yes (see page 22)

I/O terminals on OPTA9

See page 20.

Jumper selections

See page 21.

OPTA9 parameters

See page 22.

Tel. +358 (0) 201 2121 • Fax +358 (0)201 212 205
Artisan Technology Group - Quality Instrumentation ... Guaranteed | (888) 88-SOURCE | www.artisantg.com

3.1.9 OPTAL

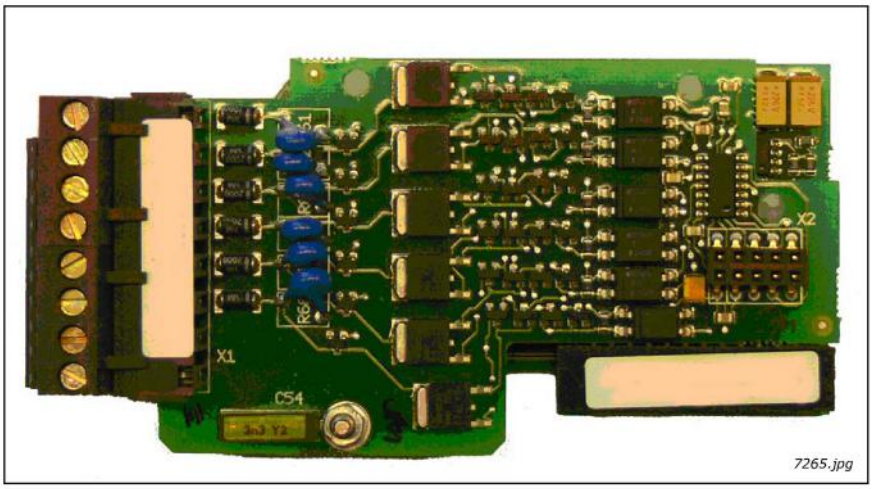

Description:	Dual I/O expander board with six 42...240 VAC digital inputs, 2 analog inputs, two analog outputs, one digital output and 15 and 24 V out.
Allowed slots:	A
Type ID:	16716
Terminals:	Two terminal blocks; Screw terminals (M2.6, 1,5 mm2 wire terminals 1 – 10; M3, 2.5 mm2 wire terminals 11-18); No coding
Jumpers:	None
Board parameters:	None

I/O terminals on OPTAL

Table 17. OPTAL I/O terminals

Terminal		Parameter reference Keypad/NCDrive	Technical information
1	+15 V		15 V out – together with terminal 2 max 200 mA
2	+15 V		15 V out
3	AI1	An.IN:A.1	Analog input 0 – 10 V
4	AI2	An.IN:A.2	Analog input ± 10 V
5	GND		Ground for analog signals
6	AO1+	AnOUT:A.1	Analog output 0 (4) – 20 mA
7	AO2+	AnOUT:A.2	Analog output 0 – 10 V
8	DO1		Open collector digital output , 48 V, 50 mA allowed
9	GND		Ground for analog signals
10	+ 24 V		24 V out – max 200 mA
11	ACIN1	DigIN:X.1	Digital input, 42...240 VAC (threshold 35V) Control voltage: "0"<33V, "1">35V
12	ACIN2	DigIN:X.2	Digital input, 42...240 VAC (threshold 35V) Control voltage: "0"<33V, "1">35V

Artisan Technology Group - Quality Instrumentation ... Guaranteed | (888) 88-SOURCE | www.artisantg.com

Table 17. OPTAL I/O terminals

Terminal		Parameter reference Keypad/NCDrive	Technical information
13	ACIN3	DigIN:X.3	Digital input, 42...240 VAC (threshold 35V) Control voltage: "0"<33V, "1">35V
14	ACIN4	DigIN:X.4	Digital input, 42...240 VAC (threshold 35V) Control voltage: "0"<33V, "1">35V
15	ACIN5	DigIN:X.5	Digital input, 42...240 VAC (threshold 35V) Control voltage: "0"<33V, "1">35V
16	ACIN6	DigIN:X.6	Digital input, 42...240 VAC (threshold 35V) Control voltage: "0"<33V, "1">35V
17 18	COMMON		Common input for DI1 - 6

Tel. +358 (0) 201 2121 • Fax +358 (0)201 212 205

Artisan Technology Group - Quality Instrumentation ... Guaranteed | (888) 88-SOURCE | www.artisantg.com

3.1.10 OPTAE

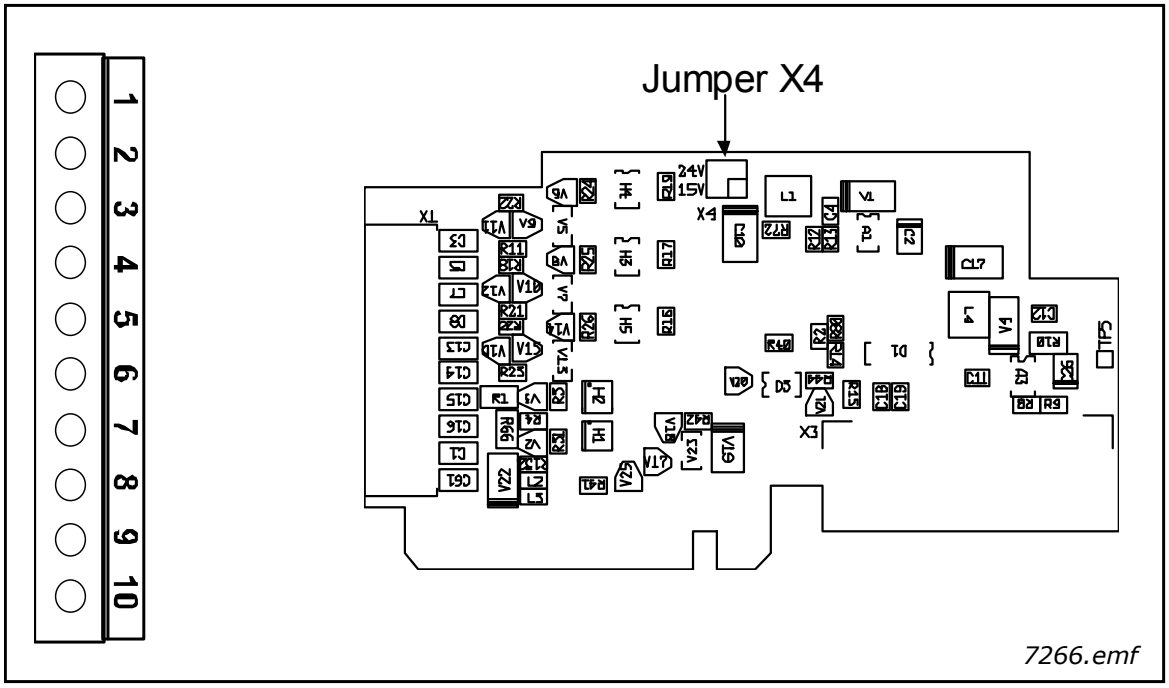

Description: Encoder board for Vacon NXP. Encoder input board with programmable control voltage for an encoder.

The OPTAE board is designed for HTL (High voltage Transistor Logic) type encoders (voltage output type push-pull HTL, open collector output type HTL) which provide input signal levels dependent on the supply voltage of the encoder. The encoder inputs A, B and Z are galvanically isolated.

In addition, the board includes an Encoder Direction Signal and an Encoder Pulse Output Signal. The Encoder Direction Signal value '1' indicates a backward motor direction and '0' a forward motor direction. The Encoder Pulse Output signal is produced from The Encoder input signals (channel A) divided by the divider parameter (see page 49).

Allowed slots: C

Type ID: 16709

Terminals: One terminal block; Screw terminals (M2.6); Coding in terminal #3.

Jumpers: 1; X4 (see page 47)

Board parameters: Yes

Artisan Technology Group - Quality Instrumentation ... Guaranteed | (888) 88-SOURCE | www.artisantg.com

I/O terminals on OPTAE (coded terminal painted black)

Table 18. OPTAE I/O terminals

Terminal		Parameter reference Keypad/NCDrive	Technical information
1	DIC1A+		Pulse input A (differential); Voltage range 10...24V
2	DIC1A–		
3	DIC2B+		Pulse input B; phase shift of 90 degrees compared to Pulse input A (differential); Voltage range 10...24V
4	DIC2B–		
5	DIC3Z+		Pulse input Z; one pulse per revolution (differential); Voltage range 10...24V
6	DIC3Z–		
7	DO1		Encoder divider output. Encoder input signals are divided by divider paramater (see parameter list on page 49)
8	DO2		Encoder direction output. The signal value '1' means that the motor direction is backward and '0' is forward.
9	GND		Ground for control
10	+15V/+24V		Control voltage (auxiliary voltage) output to encoder; Output voltage selectable with jumper X4.

NOTE: Encoder inputs are wide range inputs that can be used with encoders using +15V or +24V.

Technical data:

Encoder control voltage, +15V/+24V	Control voltage selectable with jumper X4.
Encoder input connections, inputs A+, A–, B+, B–, Z+, Z–	Max. input frequency ≤150kHz Inputs A, B and Z are differential
Encoder divider output DO1, Encoder direction output DO2	Max.load voltage 60Vdc Max. load current 50mA Max. output frequency ≤300kHz

Jumper selections

On the OPTAE board, there is one jumper block used to program the control voltage (auxiliary voltage). The factory default and other available jumper selections are presented below.

Jumper block X4:
Auxilia ry voltage level

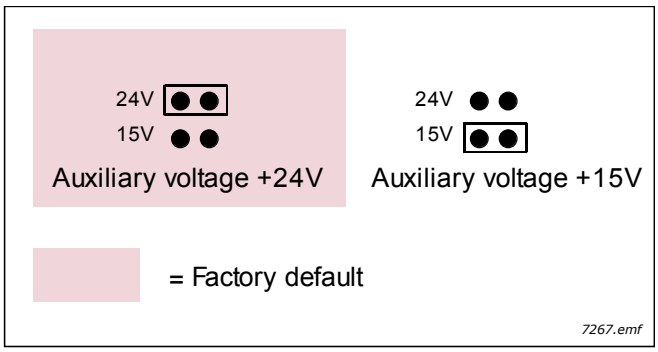

Usage: Closed Loop Vector Control. The OPTAE board is mainly used in conventional industrial applications where encoder cable lengths are relatively long.

Tel. +358 (0) 201 2121 • Fax +358 (0)201 212 205
Artisan Technology Group - Quality Instrumentation ... Guaranteed | (888) 88-SOURCE | www.artisantg.com

Encoder connection - single-ended

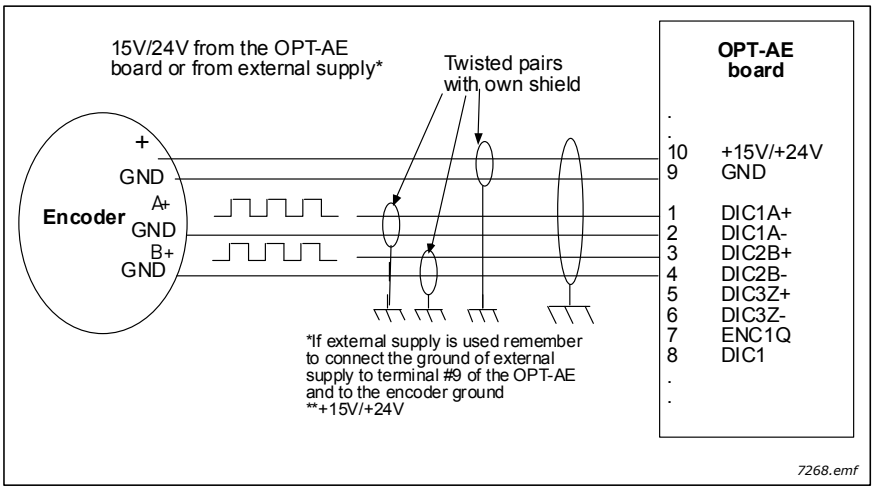

Figure 20. HTL type encoder connection (open source) using single-ended inputs

NOTE! Grounding is to be connected only at the frequency converter to avoid circulating current in the shield. Isolate shield at the encoder.

It is recommended to use double shielded cable for encoder connection.

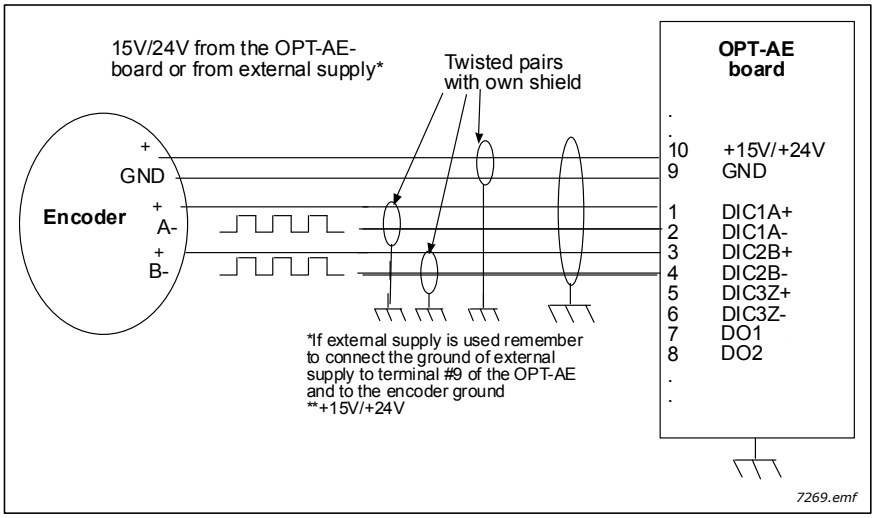

Figure 21. HTL type encoder connection (open collector) using single-ended inputs

NOTE! Grounding is to be connected only at the frequency converter to avoid circulating current in the shield. Isolate shield at the encoder.

It is recommended to use double shielded cable for encoder connection.

Artisan Technology Group - Quality Instrumentation ... Guaranteed | (888) 88-SOURCE | www.artisantg.com

Encoder connection – differential

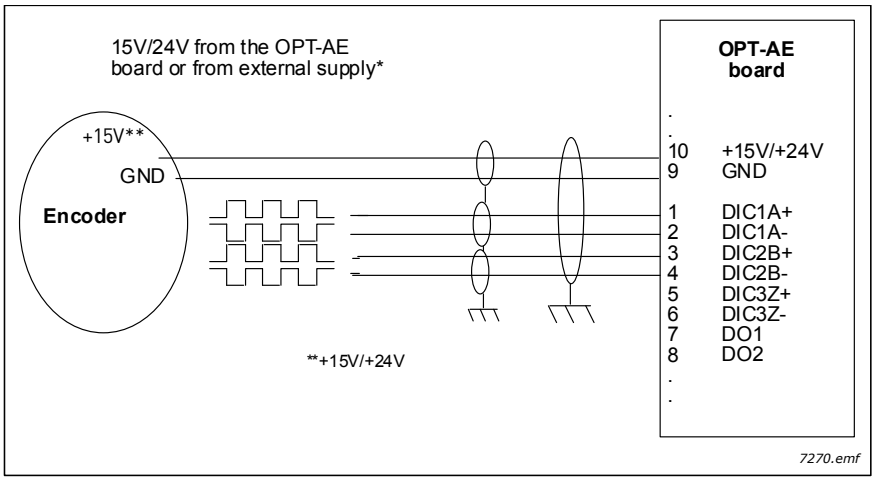

Figure 22. HTL type encoder connection using differential inputs

OPTAE parameters

Table 19. OPTAE board-related parameters

Number	Parameter	Min	Max	Default	Note
7.3.1.1	Pulse/revolution	1	65535	1024	
7.3.1.2	Invert direction	0	1	0	0 = No 1 = Yes
7.3.1.3	Reading rate	0	4	1	Time used to calculate speed actual value. NOTE: Use value 1 in Closed Loop mode. 0 = No calculation 1 = 1 ms 2 = 5 ms 3 = 10 ms 4 = 50 ms
7.3.1.4	Divider Value	1	2048	64	Input pulses / Divider = Divider Output
7.3.1.5	Hysteresis for Direction Out	0	511	8	Number of pulses before direction signal change state

Tel. +358 (0) 201 2121 • Fax +358 (0)201 212 205
Artisan Technology Group - Quality Instrumentation ... Guaranteed | (888) 88-SOURCE | www.artisantg.com

3.1.11 OPTAN

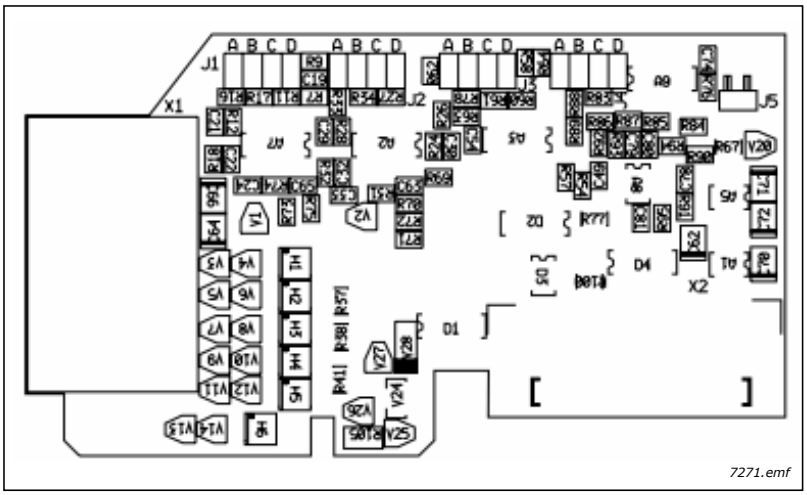

Description:	Standard I/O board for Vacon NXP with 6 galvanically isolated digital inputs and two analogue inputs/outputs. The Analogue channels are programmable: 1 = 0...20mA 2 = 4...20mA 3 = 0...10V 4 = 2...10V 5 = -10...+10V
Allowed slots:	A
Type ID:	16718
Terminals:	Two terminal blocks (coded = mounting of blocks in wrong order prevented, terminals #1 and #12);
Jumpers:	J1, J2, J3, J4
Board parameters:	Yes (see page 52)

Artisan Technology Group - Quality Instrumentation ... Guaranteed | (888) 88-SOURCE | www.artisantg.com

I/O terminals on OPTAN

Table 20. OPTAN I/O terminals

Terminal		Technical information
1	AI1-	Selection V or mA with jumper block J1 Default: 0– +10V (Ri = 200 kΩ) (-10V..+10V Joy-stick control, selected with jumper) 0– 20mA (Ri = 250 Ω) Resolution 0.1%; Accuracy ±1% Differential input if not connected to ground; Allows ±20V differential mode voltage to GND
2	AI1+	
3	AI2-	Selection V or mA with jumper block J2 Default: 0– +10V (Ri = 200 kΩ) (-10V..+10V Joy-stick control, selected with jumper) 0– 20mA (Ri = 250 Ω) Resolution 0.1%; Accuracy ±1% Differential input if not connected to ground; Allows ±20V differential mode voltage to GND
4	AI2+	
5	-10V_POT_REF	10V reference voltage 10mA
6	GND POT COM	Common for POT
7	+10V_POT_REF	+10V reference voltage 10mA
8	AO1+	Analogue output Output signal range: Current 0(4)–20mA, RL max 500Ω, Voltage 0—10V, RL >1kΩ or Voltage -10-+10, RL>1kΩ Selection V or mA with jumper blocks J3 for AO1, J4 for AO2 Resolution: 0.1% (10 bits); Accuracy ±2%
9	GND AO COM	
10	AO2+	
11	DIN1	Digital input 1 (Common DI COM); Ri = min. 5kΩ
12	DIN2	Digital input 2 (Common DI COM); Ri = min. 5kΩ
13	DIN3	Digital input 3 (Common DI COM); Ri = min. 5kΩ
14	DIN4	Digital input 4 (Common DI COM); Ri = min. 5kΩ
15	DIN5	Digital input 5 (Common DI COM); Ri = min. 5kΩ
16	DIN6	Digital input 6 (Common DI COM); Ri = min. 5kΩ
17	DI COM	DI COM isolated from GND
18	DI COM	DI COM isolated from GND
19	24 V out (bi-directional)	24V auxiliary voltage output. Short-circuit protected. ±15%, maximum current 150 mA, +24Vdc external supply may be connected.
20	GND 24V COM	Ground for reference and controls

Tel. +358 (0) 201 2121 • Fax +358 (0)201 212 205

Artisan Technology Group - Quality Instrumentation ... Guaranteed | (888) 88-SOURCE | www.artisantg.com

Jumper selections

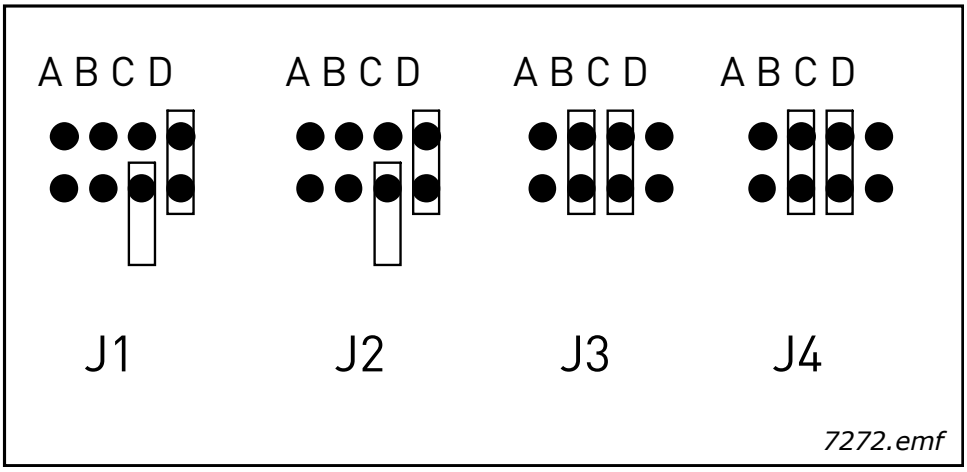

J1 (AI1), J2 (AI2)	Analog Input Mode	0 ... 10	D (default)
J1 (AI1), J2 (AI2)	Analog Input Mode	–10 ... +10V	CD
J1 (AI1), J2 (AI2)	Analog Input Mode	0 ... 20mA	AB
J3 (AO1), J4 (AO2)	Analog Output	0 ... 10V	BC (default)
J3 (AO1), J4 (AO2)	Analog Output	–10 ... +10V	CD
J3 (AO1), J4 (AO2)	Analog Output	0 ... 20mA	AB

OPTAN board parameters

Table 21. OPTAN board-related parameters

Number	Parameter	Min	Max	Default	Note
7.1.1.1	AI1 mode	1	5	3	1 = 0...20mA 2 = 4...20mA 3 = 0...10V 4 = 2...10V 5 = -10...+10V
7.1.1.2	AI2 mode	1	5	3	1 = 0...20mA 2 = 4...20mA 3 = 0...10V 4 = 2...10V 5 = -10...+10V
7.1.1.3	AO1 mode	1	5	3	1 = 0...20mA 2 = 4...20mA 3 = 0...10V 4 = 2...10V 5 = -10...+10V
7.1.1.4	AO2 mode	1	5	3	1 = 0...20mA 2 = 4...20mA 3 = 0...10V 4 = 2...10V 5 = -10...+10V

Artisan Technology Group - Quality Instrumentation ... Guaranteed | (888) 88-SOURCE | www.artisantg.com

OPTAN board I/O monitor values

Table 22. OPTAN board monitor values

Number	Parameter	Description
7.1.2.1	DigIN:A.1	DIN1 Status
7.1.2.2	DigIN:A.2	DIN2 Status
7.1.2.3	DigIN:A.3	DIN3 Status
7.1.2.4	DigIN:A.4	DIN4 Status
7.1.2.5	DigIN:A.5	DIN5 Status
7.1.2.6	DigIN:A.6	DIN6 Status
7.1.2.7	DigIN:A.8	Not in use
7.1.2.8	DigOUT:A.1	Not in use
7.1.2.9	AnIN:A.1	AI1 Status
7.1.2.10	AnIN:A.2	AI2 Status
7.1.2.11	AnOUT:A.1	AO1 Status
7.1.2.12	AnOUT:A.2	AO2 Status

Tel. +358 (0) 201 2121 • Fax +358 (0)201 212 205

Artisan Technology Group - Quality Instrumentation ... Guaranteed | (888) 88-SOURCE | www.artisantg.com

3.2 I/O EXPANDER BOARDS OPTB_

- Option boards used for I/O expansion
- This board type can normally be plugged into slots B, C, D or E.

The number of control inputs and outputs on your Vacon frequency converter can be increased with the *I/O Expander boards.* This kind of boards can usually be placed in any board slot inside the frequency converter control unit except for slot A.

There are no board-related parameters for OPTB_ I/O expander boards (except for board OPTBB).

The boards you wish to have installed in your frequency converter have to be defined in the type designation code of the frequency converter when ordering it from the factory.

Table 23. Vacon NX I/O Expander boards and their equipment

FC type	I/O board	Allowed slots	DI	AI	TI	AO	DO	RO	Pt-100	42-240 VAC input	Other
NXS NXP	OPTB1	B,C,D,E	(6)				(6)				
NXS NXP NXL	OPTB2	B,C,D,E			1			2			
NXS NXP NXL	OPTB4	B,C,D,E		1 (iso-lated);(mA)		2 (isolated mA)					+24V/ EXT+24V
NXS NXP NXL	OPTB5	B,C,D,E						3			
NXS NXP	OPTB8	B,C,D,E							3		
NXS NXP	OPTB9	B,C,D,E						1		5	
NXS NXP	OPTB9	B,C,D,E	2 (enc)								
NXS NXP	OPTBB	C									
NXS NXP	OPTBH	B,C,D,E									

DI = Digital input
AI = Analogue input
TI = Thermistor input
Pt-100 = Sensor input for Pt-100
AO = Analogue output
RO = Relay output

Artisan Technology Group - Quality Instrumentation ... Guaranteed | (888) 88-SOURCE | www.artisantg.com

3.2.1 OPTB1

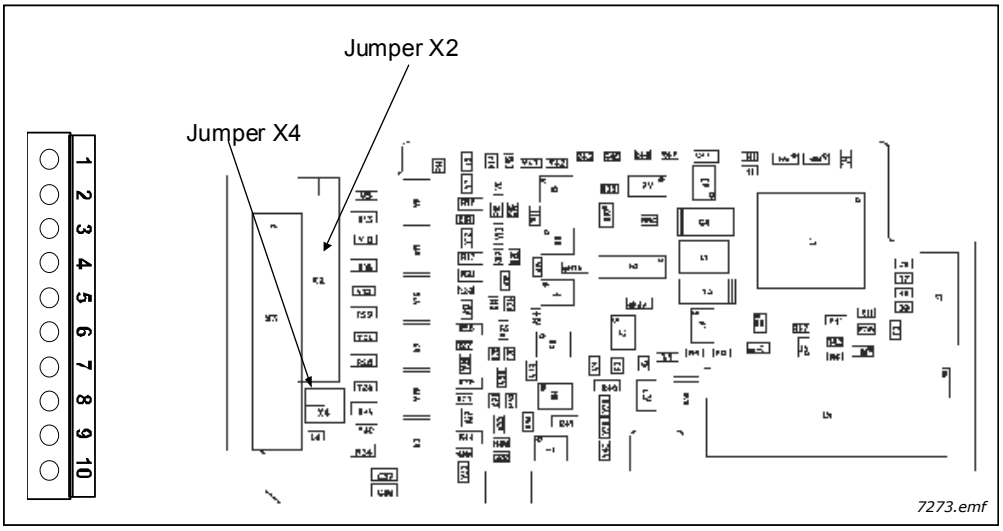

Description: Vacon NX I/O expander board with six bidirectional terminals.
Allowed slots: B, C, D, E
Type ID: 16945
Terminals: One terminal block; Screw terminals (M2.6); No coding
Jumpers: 2; X2 and X4 (see page 56)
Board parameters: None

I/O terminals on OPTB1

Table 24. OPTB1 I/O terminals

Terminal		Parameter reference Keypad/NCDrive	Technical information
1	DIO1	DigIN: X.1 DigOUT: X.1	Digital input: 24V; R_i>5kΩ Digital output: Open collector, 50mA/48V
2	DIO2	DigIN: X.2 DigOUT: X.2	See above.
3	DIO3	DigIN: X.3 DigOUT: X.3	See above.
4	CMA		Common for DIO1...DIO3. Note: CMA is internally connected to GND with jumper by default.
5	DIO4	DigIN: X.4 DigOUT: X.4	Digital input: 24V; R_i>5kΩ Digital output: Open collector, 50mA/48V
6	DIO5	DigIN: X.5 DigOUT: X.5	See above.
7	DIO6	DigIN: X.6 DigOUT: X.6	See above.

Tel. +358 (0) 201 2121 • Fax +358 (0)201 212 205
Artisan Technology Group - Quality Instrumentation ... Guaranteed | (888) 88-SOURCE | www.artisantg.com

Table 24. OPTB1 I/O terminals

Terminal		Parameter reference Keypad/NCDrive	Technical information
8	CMB		Common for DIO4...DIO6
9	GND		I/O ground; Ground for reference and controls.
10	+24V		Control voltage output; Voltage for switches etc.; max. current 150mA; Short-circuit protected.

Jumper selections

On the OPTB1 board, there are two jumper blocks. The jumper block X2 is used to define the bidirectional terminal as either input or output. The other jumper block, X4, is used to connect the common terminals to GND. The factory default and other available jumper selections are presented below.

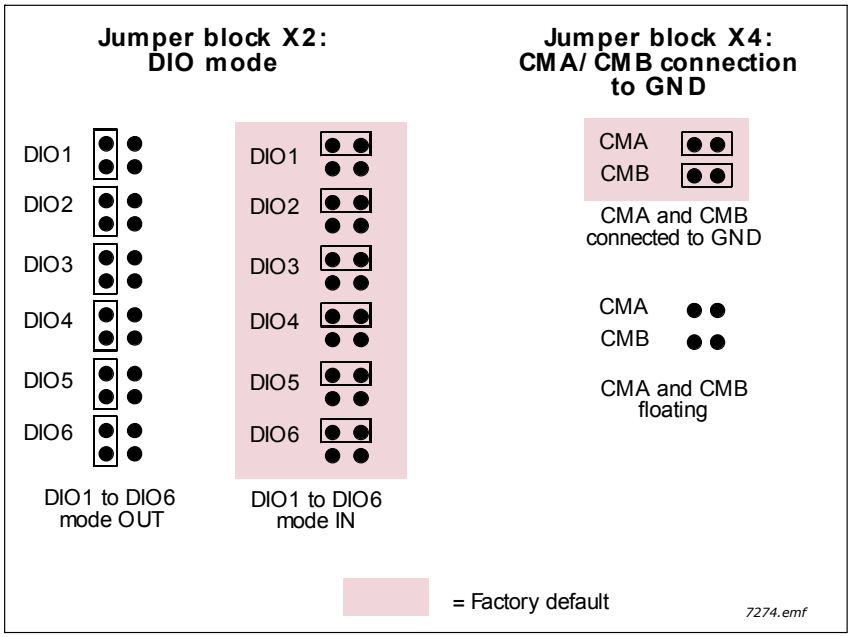

Figure 23. Jumper positions for OPTB1

Artisan Technology Group - Quality Instrumentation ... Guaranteed | (888) 88-SOURCE | www.artisantg.com

3.2.2 OPTB2

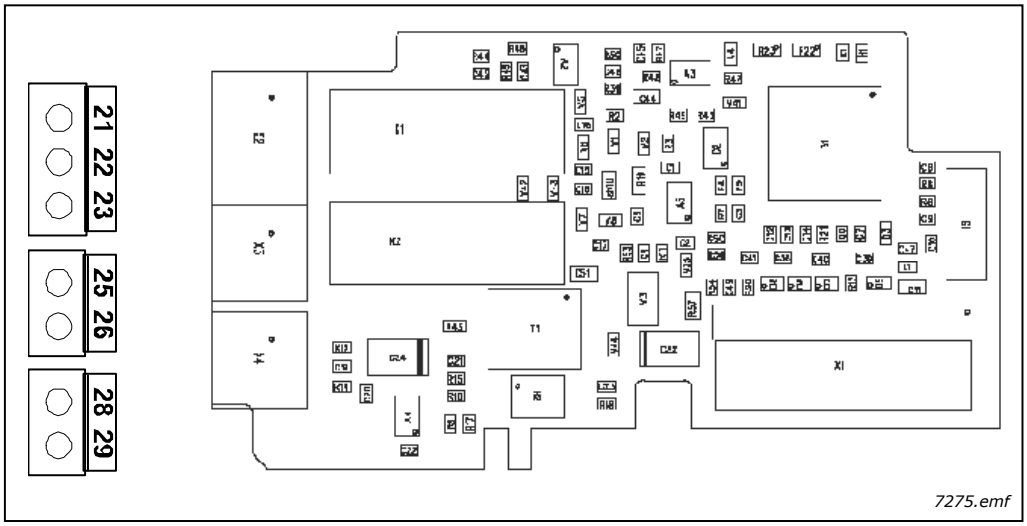

Description:	Vacon NX I/O expander board with a thermistor input and two relay outputs.
Allowed slots:	B, C, D, E
Type ID:	16946
Terminals:	Three terminal blocks; Screw terminals (M3); No coding
Jumpers:	None
Board parameters:	None

I/O terminals on OPTB2

Table 25. OPTB2 I/O terminals

Terminal		Parameter reference Keypad/NCDrive	Technical information	
21 22 23	RO1/normal closed RO1/common RO1/normal open	DigOUT:X.1	Switching capacity Min. switching load	24VDC/8A 250VAC/8A 125VDC/0.4A 5V/10mA
25 26	RO2/common RO2/normal open	DigOUT:X.2	Switching capacity Min. switching load	24VDC/8A 250VAC/8A 125VDC/0.4A 5V/10mA
28 29	TI1+ TI1–	DigIN:X.1	Thermistor input (galvanically isolated) R_{trip} = 4.7kΩ	

NOTE: This expander board can be placed into four different slots on the control board. Therefore, the 'X' given in the Parameter reference shall be replaced by the slot letter (B, C, D, or E) depending on the slot which the expander board is plugged into. See Chapter 1.7.

Tel. +358 (0) 201 2121 • Fax +358 (0)201 212 205

Artisan Technology Group - Quality Instrumentation ... Guaranteed | (888) 88-SOURCE | www.artisantg.com

3.2.3 OPTB4

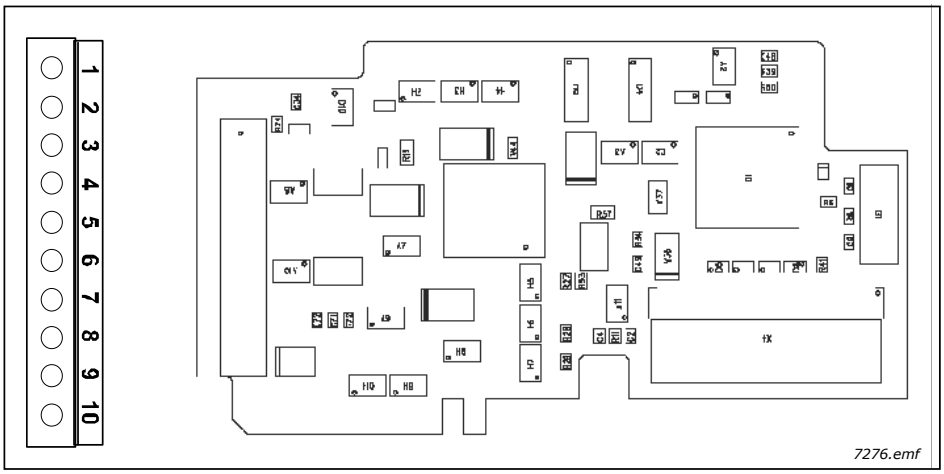

Description:	Vacon NX I/O expander board with one galvanically isolated analogue input and two galvanically isolated analogue outputs (standard signals 0(4)...20mA).
Allowed slots:	B, C, D, E
Type ID:	16948
Terminals:	One terminal block; Screw terminals (M2.6); No coding
Jumpers:	None
Board parameters:	None

I/O terminals on OPTB4

Table 26. OPTB4 I/O terminals

Terminal		Parameter reference Keypad/NCDrive	Technical information
1	AI1+	AnIN:X.1	0(4)...20mA; R_i=250Ω; galvanically isolated Resolution 10 bits/0.1%; Accuracy ±1% of the full display
2	AI1–		
3	AO1+	AnOUT:X.1	0(4)...20mA; R_L<500Ω; Resolution 10 bits/0.1%; Accuracy ≤ ±2% (galvanically isolated)
4	AO1–		
5	AO2+	AnOUT:X.2	0(4)...20mA; R_L<500Ω; Resolution 10 bits/0.1%; Accuracy ≤ ±2% (galvanically isolated)
6	AO2–		
7	GND		24V (±15%); Max. load 250mA (total load from EXT+24V outputs), max. 150mA from one board. See *Figure 3* on page 7. 24V (±15%), in special applications where PLC type functions are included in the control module, this input can be used as external auxiliary power supply for control boards as well as for I/O boards.
8	GND		
9	GND		
10	+24V		

NOTE: This expander board can be placed into four different slots on the control board. Therefore, the 'X' given in the Parameter reference shall be replaced by the slot letter (B, C, D, or E) depending on the slot which the expander board is plugged into. See Chapter1.7.

Artisan Technology Group - Quality Instrumentation ... Guaranteed | (888) 88-SOURCE | www.artisantg.com

3.2.4 OPTB5

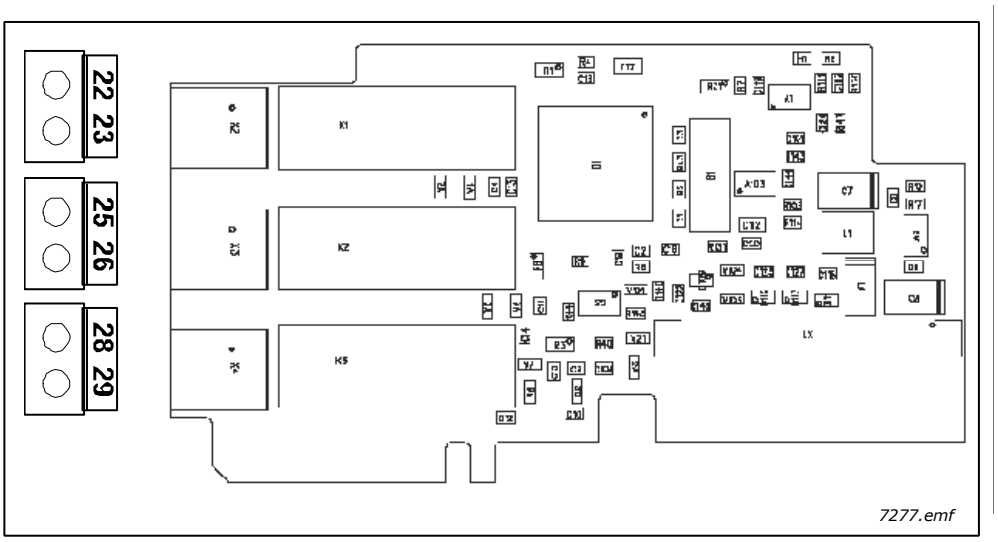

Description:	I/O expander board with three relay outputs.
Allowed slots:	B, C, D, E
Type ID:	16949
Terminals:	Three terminal blocks; Screw terminals (M3); No coding
Jumpers:	None
Board parameters:	None

I/O terminals on OPTB5

Table 27. OPTB5 I/O terminals

Terminal		Parameter reference Keypad/NCDrive	Technical information	
22 23	RO1/common RO1/normal open	DigOUT:X.1	Switching capacity Min. switching load	24VDC/8A 250VAC/8A 125VDC/0.4A 5V/10mA
25 26	RO2/common RO2/normal open	DigOUT:X.2	Switching capacity Min. switching load	24VDC/8A 250VAC/8A 125VDC/0.4A 5V/10mA
28 29	RO3/common RO3/normal open	DigOUT:X.3	Switching capacity Min. switching load	24VDC/8A 250VAC/8A 125VDC/0.4A 5V/10mA

NOTE: This expander board can be placed into four different slots on the control board. Therefore, the 'X' given in the Parameter reference shall be replaced by the slot letter (B, C, D, or E) depending on the slot which the expander board is plugged into. See chapter 1.7.

Tel. +358 (0) 201 2121 • Fax +358 (0)201 212 205

Artisan Technology Group - Quality Instrumentation ... Guaranteed | (888) 88-SOURCE | www.artisantg.com

3.2.5 OPTB8

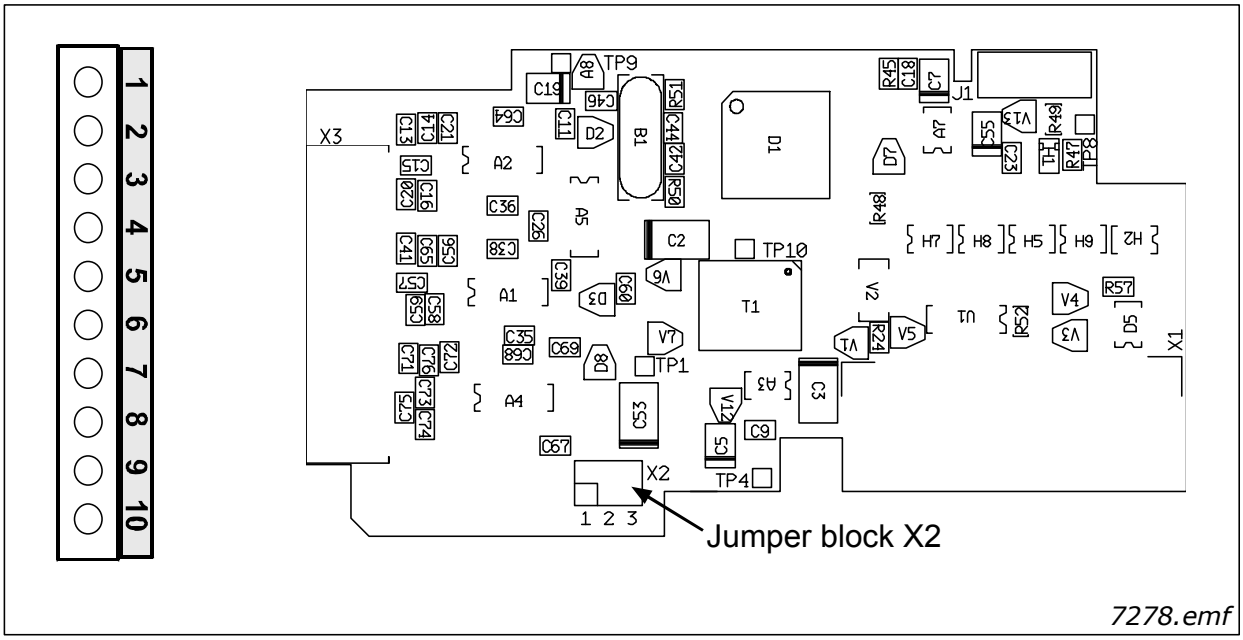

Description: Temperature measuring board with three Pt-100 sensor (3-wire) inputs. The measurable temperature range is –30...200 C° on Pt-100 input. Both 3-wire and 2-wire elements can be used.

Allowed slots: B, C, D, E

Type ID: 16952

Terminals: One terminal block; Screw terminals (M2.6); No coding

Jumpers: X2

Board parameters: None

I/O terminals on OPTB8

Table 28. OPTB8 I/O terminals

Terminal		Parameter reference Keypad/NCDrive	Technical information
1	R1 +	AnIN:X.1	PT100 Input, -30 ... 200 °C, one sensor. Accuracy ≤ 1°C. Sensor current 10 mA.
2	R_m1		
3	R1 -		
4	R2 +	AnIN:X.2	PT100 Input, -30 ... 200 °C, one sensor. Accuracy ≤ 1°C. Sensor current 10 mA.
5	R_m2		
6	R2-		
7	R3 +	AnIN:X.3	PT100 Input, -30 ... 200 °C 1 - 3 sensors (see X2 jumper selections). Accuracy ≤ 1°C. Sensor current 10 mA.
8	R_m3		
9	R3 -		
10	NC		Not connected

Artisan Technology Group - Quality Instrumentation ... Guaranteed | (888) 88-SOURCE | www.artisantg.com

Connection of PT100 sensors

One PT100-sensor can be connected to the first two inputs (terminals 1 to 3 and 4 to 6) and up to three sensors to the third input (terminals 7 to 9). The sensors must be connected in series with a two- or three-wire connection. See Chapter Jumper selections below.

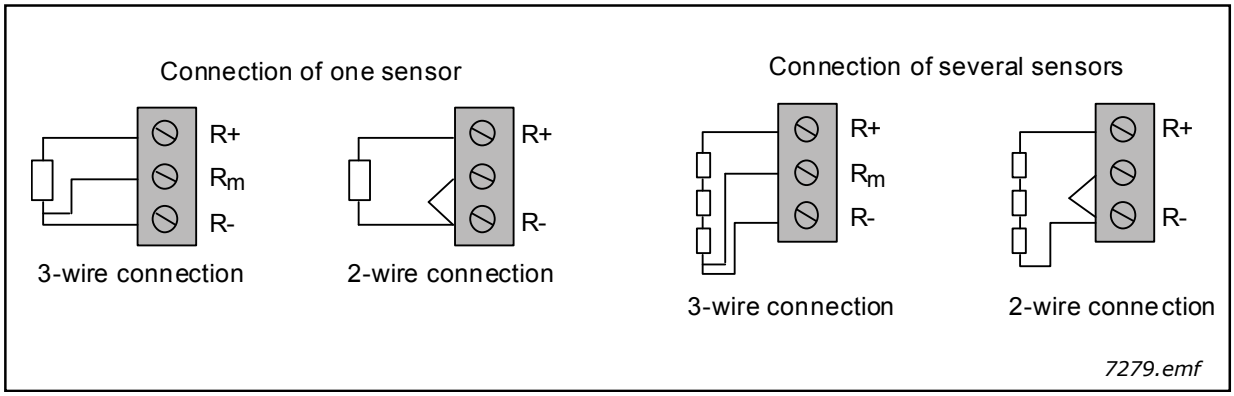

NOTE:

- This expander board can be placed into four different slots on the control board. Therefore, the 'X' given in the Parameter reference shall be replaced by the slot letter (B, C, D, or E) depending on the slot which the expander board is plugged into. See chapter 1.7.
- Insulation level 4kV/sqrt(2) (DIN VDE 01 10-1). 2kV in sensor and 2kV in option board.

Jumper selections

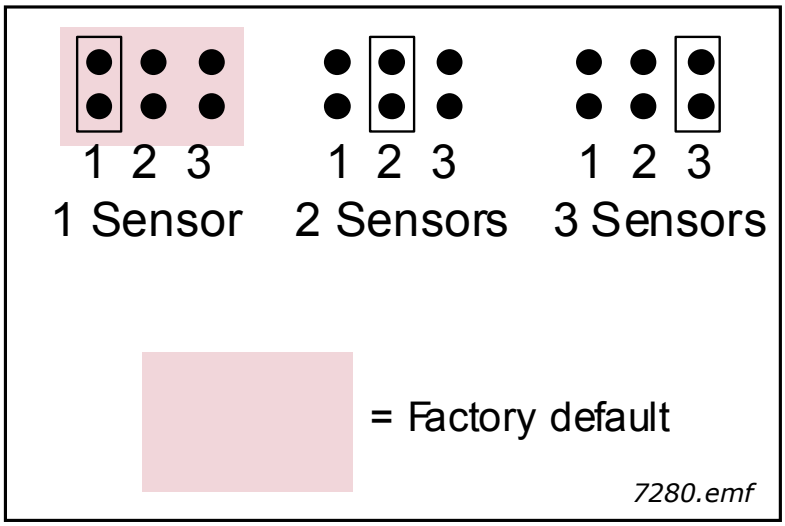

Up to three PT100 sensors can be connected to the third PT100 input. You can select the number of sensors in use with jumper block X2:

Tel. +358 (0) 201 2121 • Fax +358 (0)201 212 205
Artisan Technology Group - Quality Instrumentation ... Guaranteed | (888) 88-SOURCE | www.artisantg.com

3.2.6 OPTB9

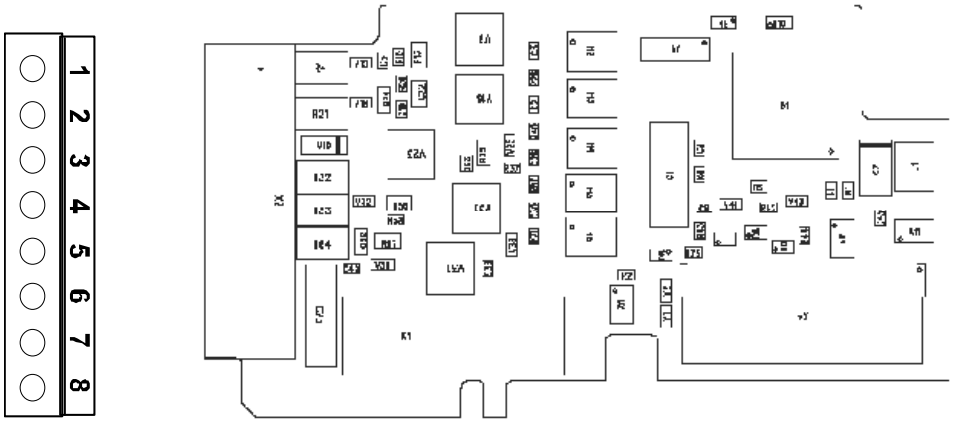

7281.emf

Description: I/O expander board with five 42...240 VAC digital inputs and one normal relay output.

Allowed slots: B, C, D, E

Type ID: 16953

Terminals: One terminal block; Screw terminals (M2.6); No coding

Jumpers: None

Board parameters: None

I/O terminals on OPTB9

Table 29. OPTB9 I/O terminals

Terminal		Parameter reference Keypad/NCDrive	Technical information
1	ACIN1	DigIN:X.1	Digital input, 42...240 VAC (threshold 35V) Control voltage: "0"<33V, "1">35V
2	ACIN2	DigIN:X.2	Digital input, 42...240 VAC (threshold 35V) Control voltage: "0"<33V, "1">35V
3	ACIN3	DigIN:X.3	Digital input, 42...240 VAC (threshold 35V) Control voltage: "0"<33V, "1">35V
4	ACIN4	DigIN:X.4	Digital input, 42...240 VAC (threshold 35V) Control voltage: "0"<33V, "1">35V
5	ACIN5	DigIN:X.5	Digital input, 42...240 VAC (threshold 35V) Control voltage: "0"<33V, "1">35V
6	COMA		Digital input, 42...240 VAC (threshold 35V) Control voltage: "0"<33V, "1">35V
7 8	RO1/common RO1/normal open	DigOUT:X.1	Switching capacity 24VDC/8A 250VAC/8A 125VDC/0.4A

NOTE: This expander board can be placed into four different slots on the control board. Therefore, the 'X' given in the Parameter reference shall be replaced by the slot letter (B, C, D, or E) depending on the slot which the expander board is plugged into. See chapter 1.7.

Artisan Technology Group - Quality Instrumentation ... Guaranteed | (888) 88-SOURCE | www.artisantg.com

3.2.7 OPTBB

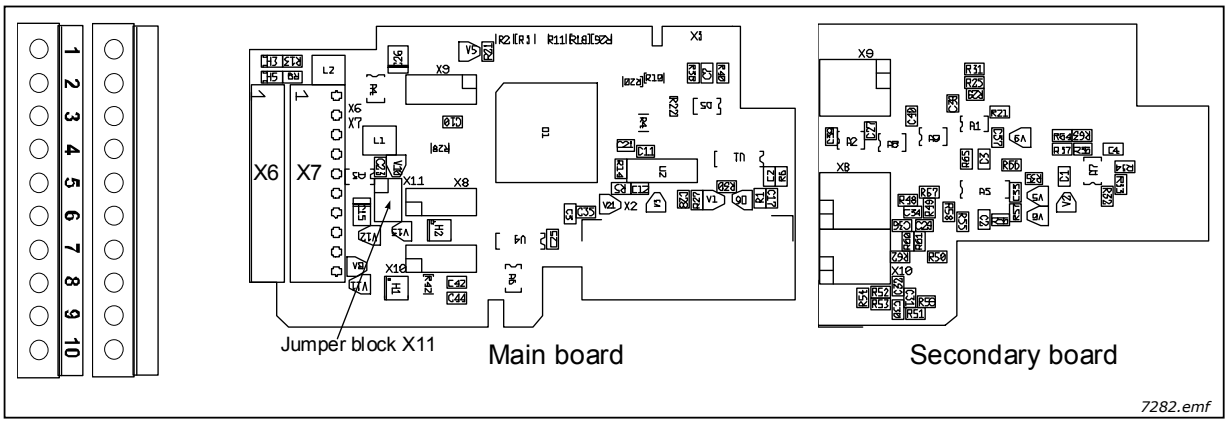

Description:	Absolute encoder board for Vacon NXP with inputs for an *Endat* type encoder. Programmable control voltage, fast digital inputs and simulation pulse output. The output pulse is produced from sinusoidal input signals. The galvanically isolated fast digital inputs are used to trace very short pulses.
Allowed slots:	C
Type ID:	16962 (main board), 16963 (secondary board); The secondary board is mounted on top of the main board
Terminals:	Two terminal blocks; Screw terminals (M2.6); No coding
Jumpers:	1; X11 (see page 65)
Board parameters:	Yes (see page 65)

An absolute encoder is a type of encoder capable of specifying its absolute position. The position data is retained even during a power failure or breakdown. The position data carried by the absolute encoder can be used by the frequency converter motor control in the control of a synchronous motor.

Encoder cable	Heidenhain cable; Max. length 100m
Encoder voltage	5V, 12V or 15V Max. current consumption 300mA
Measuring steps/ revolution	4,2 billion (max. 32bit)
Distiguishable revolutions	0—65535 (max. 16bit)
Signal periods/revolution	1—65535

ENDAT is a bidirectional synchronic serial interface for absolute encoders. For example, the encoder position data can be read and encoder parameters can be set via the ENDAT connection. It also forwards the messages related to the encoder functions.

All Endat connections are available in terminal X6. The board uses Endat version 2.

Sinus signals require some precautions for noise immunity that may be a little more demanding than conventional square wave encoders. Use of twisted pairs (possibly with individual shielding of

Tel. +358 (0) 201 2121 • Fax +358 (0)201 212 205
Artisan Technology Group - Quality Instrumentation ... Guaranteed | (888) 88-SOURCE | www.artisantg.com

each pair) is recommended. Use one pair for sinus+ and sinus-, another pair for cosinus+ and cosinus-, another pair for data+ data- of the absolute serial channel, another pair for clock+ and clock- of absolute channel.

I/O terminals on OPTBB, encoder terminal X6

Table 30. I/O terminals on OPTBB, terminal X6

Terminal		Heidenheim colour code	Technical data
1	DATA+	Grey	Data line 120Ω/RS-485
2	DATA–	Pink	
3	CLOCK+	Violet	Clock line 120Ω/RS-485 (200—400kHz)
4	CLOCK–	Yellow	
5	A+	Green/black	1Vpp (±0,5V); impedance 120Ω; Max.input 350 kHz
6	A–	Yellow/black	
7	B+	Blue/black	1Vpp (±0,5V); impedance 120Ω; Max.input 350 kHz
8	B–	Red/black	
9	GND	White/green	Input ground
10	Encoder voltage	Brown/green	Selectable encoder voltages: 5V, 12V and 15V Max.current consumption 300mA

I/O terminals on OPTBB, terminal X7

Table 31. I/O terminals on OPTBB, terminal X7

Terminal		Technical data
1	SimA+	Incremental pulse output A (differential), 0° (square wave, signal level RS-422); Impedance 120Ω; Input hysteresis ±5mV
2	SimA–	
3	SimB+	Incremental pulse output B (differential), 0° (square wave, signal level RS-422); Impedance 120Ω; Input hysteresis ±5mV
4	SimB–	
5	Not used	
6	Not used	
7	FDIN1	Fast digital input 1; HTL; Min.pulse length 50µs
8	CMA	Common FDIN1
9	FDIN2	Fast digital input 2; HTL; Min.pulse length 50µs
10	CMB	Common FDIN2

Artisan Technology Group - Quality Instrumentation ... Guaranteed | (888) 88-SOURCE | www.artisantg.com

Jumper selections

On the OPTBB board, there is one jumper block used to program the control voltage (auxiliary voltage). The factory default and other available jumper selections are presented below.

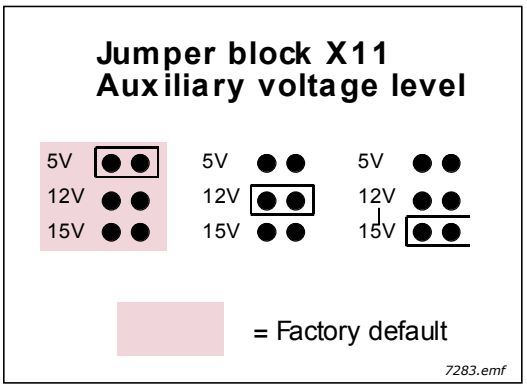

NOTE! It is recommended to use a +12 or +15 supply voltage instead of 5 V.

This is because our interface does not support "sense" function to compensate voltage drop which results in a cable length limit of about 60 m with 0.5 mm^2 wire section for the supply. The problem does not exist with 12 or 15 v supply.

If 5V is used, it is recommended to use two or more wires in parallel for supply connection.

OPTBB board parameters

Table 32. OPTBB board parameters

Code	Parameter	Min	Max	Default	Selections	Description
7.3.1.1	Reverse	0	1	0	0 = No 1 = Yes	Manually selectable rotation direction
7.3.1.2	Reading rate	0	4	1	0 = Not used 1 = 1 ms 2 = 5 ms 3 = 10 ms 4 = 50 ms	Incremental pulse reading rate. NOTE: Use value 1 in Closed Loop mode.
7.3.1.3	Interpolation	0	1	0	0 = No 1 = Yes	If activated, the sinusoidal incremental pulses are used to calculate the polar angle in order to optimize the encoder accuracy

OPTBB board monitoring values

Table 33. OPTBB board monitoring values

Code	Monitored value	Unit	Description
7.3.2.1	Encoder frequence	Hz	Motor speed in Hz calculated from encoder pulses
7.3.2.2	Encoder speed	rpm	Motor speed in rpm calculated from encoder pulses
7.3.2.3	Encoder position	-	Absolute position of encoder read from Endat
7.3.2.4	Encoder revolution		
7.3.2.5	Encoder fault		
7.3.2.6	Encoder warning		
7.3.2.7	Encoder messages		Number of messages between encoder and NXOPTBB

Tel. +358 (0) 201 2121 • Fax +358 (0)201 212 205

Artisan Technology Group - Quality Instrumentation ... Guaranteed | (888) 88-SOURCE | www.artisantg.com

OPTBB board information pages

Table 34. OPTBB board information pages

Code	Information	Unit	Description
7.3.3.1	Encoder type		0 = No encoder connected 1—4 = Incremental linear encoder 5 = Linear absolute encoder 6 = Unknown 7 = Linear absolute encoder 8 = Unknown 9—12 = Rotational incremental/angular encoder 13 = Absolute encoder (singleturn) 14 = Unknown 15 = Absolute encoder (multiturn) 16 = Unknown
7.3.3.2	Pulses/Revolution		Sinusoidal pulses/revolution
7.3.3.3	Position bits	bit	Accurate position 1—1024 (10bit = 2^{10} = 1024)
7.3.3.4	Revolution bits	bit	Accurate number of revolutions 1—1024 (10bit = 2^{10} = 1024)

OPTBB option board status LEDs

Yellow LED

LED	Meaning
OFF	Option board not activated
ON	Option board in initialisation state waiting for activation command from the frequency converter
Blinking fast (once/sec)	Option board is activated and in RUN state • Option board is ready for external communication
Blinking slow (once/5 s)	Option board is activated and in FAULT state • Internal fault of option board

Green LED

LED	Meaning
OFF	Option board not activated
ON	Encoder is being initialised Option board is reading encoder parameters
Blinking fast (once/s)	Encoder detected by option board Option board receives data from encoder
Blinking slow (once/5 s)	Encoder detected by option board Option board cannot read encoder data or data is invalid (CRC error, broken cable etc.)

Artisan Technology Group - Quality Instrumentation ... Guaranteed | (888) 88-SOURCE | www.artisantg.com

3.2.8 OPTBH

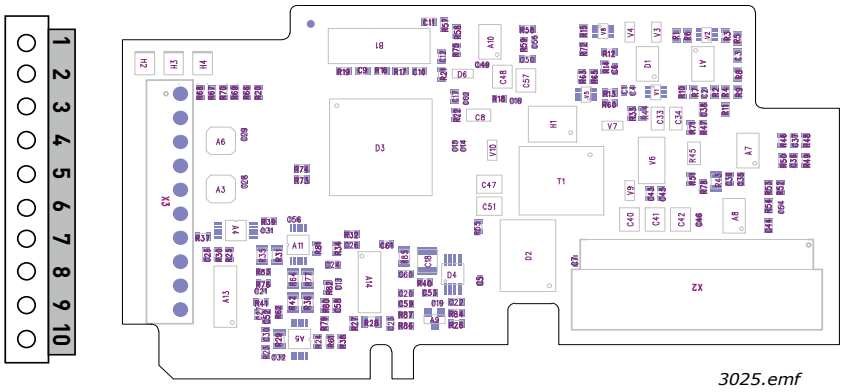

Description: Temperature measurement board with three individual channels.
Allowed slots: B, C, D, E
Supported sensors: PT100, PT1000, NI1000, KTY84-130, KTY84-150, KTY84-131
Type ID: 16968
Terminals: One terminal block; Screw terminals (M3); No coding
Jumpers: None

I/O Terminals on OPTBH

Terminal		Parameter reference Keypad	Technical information
1 **2** **3**	R1.1 R1.2 R1.3	AnIn:X.1	Temperature sensor input 1, -50...200 °C Accuracy ±1°C
4 **5** **6**	R2.1 R2.2 R2.3	AnIn:X.2	Temperature sensor input 2, -50...200 °C Accuracy ±1°C
7 **8** **9**	R3.1 R3.2 R3.3	AnIn:X.3	Temperature sensor input 3, -50...200 °C Accuracy ±1°C
10	NC		

Connecting Temperature sensors to OPTBH option board:

Use shielded cables and connect the cable shield to grounding clamp in the drive.
Allowed sensor configurations are shown on figures below:

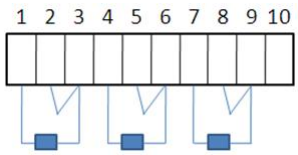

Two-wire configuration

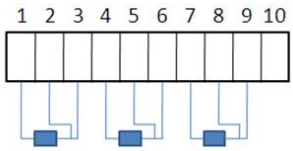

Three-wire configuration

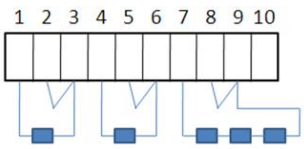

Two-wire configuration

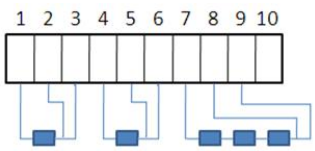

Three-wire configuration

Tel. +358 (0) 201 2121 • Fax +358 (0)201 212 205
Artisan Technology Group - Quality Instrumentation ... Guaranteed | (888) 88-SOURCE | www.artisantg.com

OPTBH board parameters

Code	Parameter	Min	Max	Unit	Default	ID	Description
7.x.1.1	Sensor 1 type	0	6		0		**0** = No Sensor **1** = PT100 **2** = PT1000 **3** = Ni1000 **4** = KTY84 **5** = 2 x PT100 **6** = 3 x PT100
7.x.1.2	Sensor 2 type	0	6		0		**See above**
7.x.1.3	Sensor 3 type	0	6		0		**See above**

Artisan Technology Group - Quality Instrumentation ... Guaranteed | (888) 88-SOURCE | www.artisantg.com

3.3 ADAPTER BOARDS OPTD_

The adapter boards do not provide any additional I/O but are used to connect the frequency converter to a Vacon communication bus (System Bus, SPI, CAN). Note that if you use any of the major *fieldbuses* (Profibus, Modbus etc.) for communication you will need a corresponding *fieldbus board*. For more information, see the specific fieldbus board manual.

NOTE: Do not plug two adapter boards into the same control board in order to avoid incompatibility problems.

Table 35. Vacon NX adapter boards

FC type	I/O board	Allowed slots	Description
NXP	OPTD1	D,E	System Bus adapter board
NXP	OPTD2	(B,)D,E	System Bus adapter board with interface to fast monitoring bus
NXS NXP	OPTD3	D,E	RS-232 adapter board
NXP	OPTD6	B,D,E	Monitor Bus adapter board for Vacon NXP

Tel. +358 (0) 201 2121 • Fax +358 (0)201 212 205

Artisan Technology Group - Quality Instrumentation ... Guaranteed | (888) 88-SOURCE | www.artisantg.com

3.3.1 OPTD1

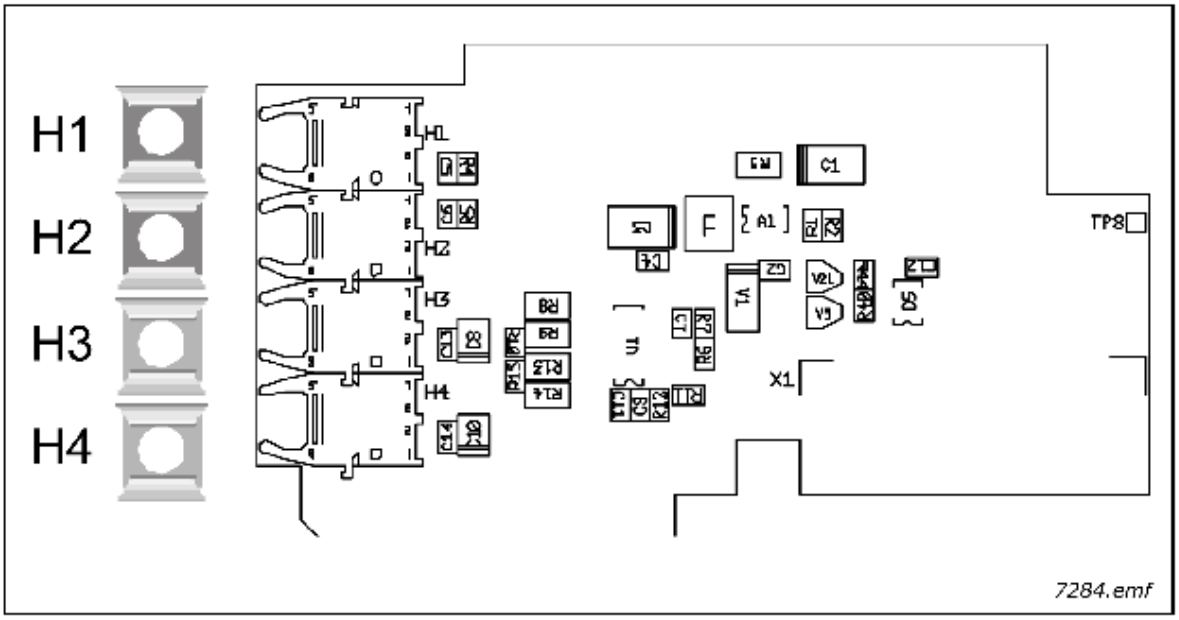

Description:	System Bus adapter board for Vacon NXP
Allowed slots:	D, E
Type ID:	17457
Terminals:	Double optical input and output terminals. Agilent HFBR-1528 (Receiver), HFBR-2528 (Transmitter).
Jumpers:	None
Board parameters:	None

I/O terminals on OPTD1

Table 36. OPTD1 I/O terminals

Terminal		Technical information
1	H1	System Bus optical input 1 (RX1) Use 1-mm optical cable (e.g. Agilent HFBR-RUS500 & HFBR-4531/4532/ 4533 connectors)
2	H2	System Bus optical input 2 (RX2) Use 1-mm optical cable (e.g. Agilent HFBR-RUS500 & HFBR-4531/4532/4533 connectors)
3	H3	System Bus optical output 1 (TX1) Use 1-mm optical cable (e.g. Agilent HFBR-RUS500)
4	H4	System Bus optical output 2 (TX2) Use 1-mm optical cable (e.g. Agilent HFBR-RUS500)

NOTE: The terminals of the board are protected with a rubber pin. Be sure to leave the pin in the unused terminals in order to avoid disturbances.

Artisan Technology Group - Quality Instrumentation ... Guaranteed | (888) 88-SOURCE | www.artisantg.com

Connections between frequency converters with OPTD1

Basic connection:

Connect the output 1 of Device 1 to the input 2 of Device 2 and the input of Device 1 to the output 2 of Device 2. Note that in the end devices one terminal pair remains unused. See Figure 24 below.

Table 37.

Max. number of devices in line	Max. speed achieved [Mbit/s]
3	12
6	6
12	3
24	1.5

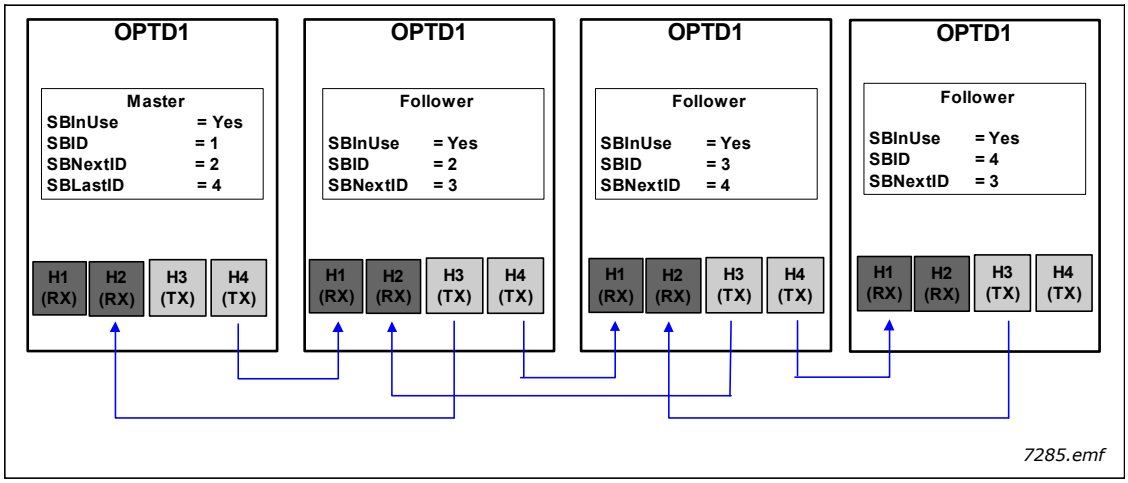

Figure 24. Basic connection of frequency converters with OPTD1

Tel. +358 (0) 201 2121 • Fax +358 (0)201 212 205

Artisan Technology Group - Quality Instrumentation ... Guaranteed | (888) 88-SOURCE | www.artisantg.com

3.3.2 OPTD2

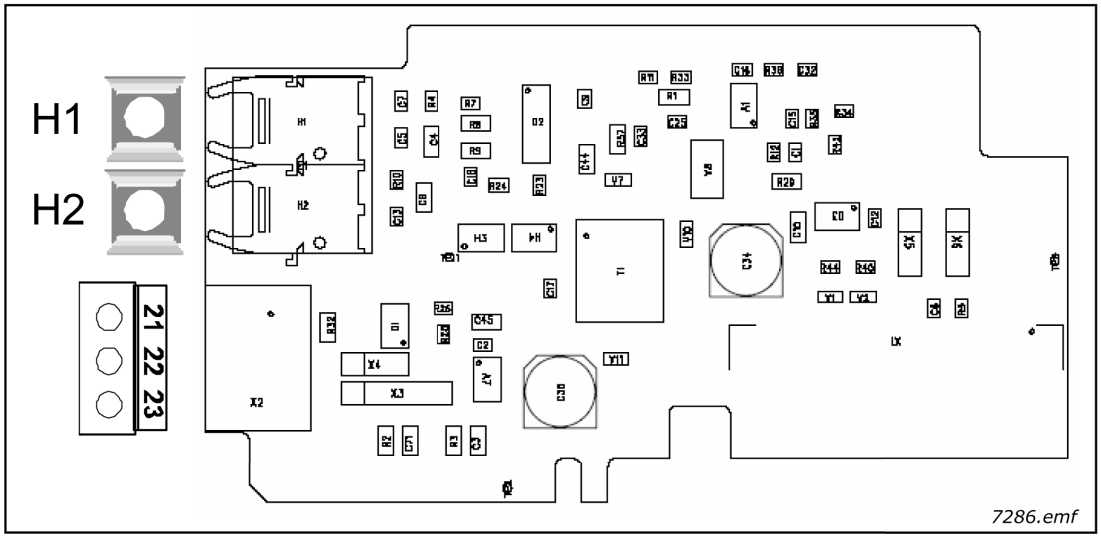

Note!	*This figure presents the layout of D2 board version H or later. See Chapter Jumper selections below.*
Description:	System Bus adapter board for Vacon NXP with single optical input and output; Interface to fast monitor bus used by the NCDrive PC tool.
Allowed slots:	(B,)D, E; *Note: If only the Monitor Bus (terminals 21 to 23) will be used, the board can also be placed in slot B. The System Bus is then unavailable. Remove therefore jumpers X5 and X6. See page 73.*
Type ID:	17458
Terminals:	Single optical input and output; one screw terminal block (M3), Agilent HFBR-1528 (Receiver), HFBR-2528 (Transmitter).
Jumpers:	Jumpers:4; X3, X4, X5 and X6. See page 73.
Board parameters:	None

I/O terminals on OPTD2

Table 38. OPTD2 I/O terminals

Terminal		Technical information
1	H1	System Bus optical input 1 (RX1) Use 1-mm optical cable (e.g. Agilent HFBR-RUS500 & HFBR-4531/4532/ 4533 connectors) **NOTE:** Not available if the board is placed in slot B
2	H2	System Bus optical output 1/2 (TX1/TX2); Selected with jumper X5 Use 1-mm optical cable (e.g. Agilent HFBR-RUS500 & HFBR-4531/4532/4533 connectors) **NOTE:** Not available if the board is placed in slot B
21	CAN_L	Monitor Bus negative data
22	CAN_H	Monitor Bus positive data
23	CAN_SHIELD	Monitor Bus shield

Artisan Technology Group - Quality Instrumentation ... Guaranteed | (888) 88-SOURCE | www.artisantg.com

Jumper selections

There are four jumper blocks on the OPTD2 board. The factory defaults and other available jumper selections are presented below.

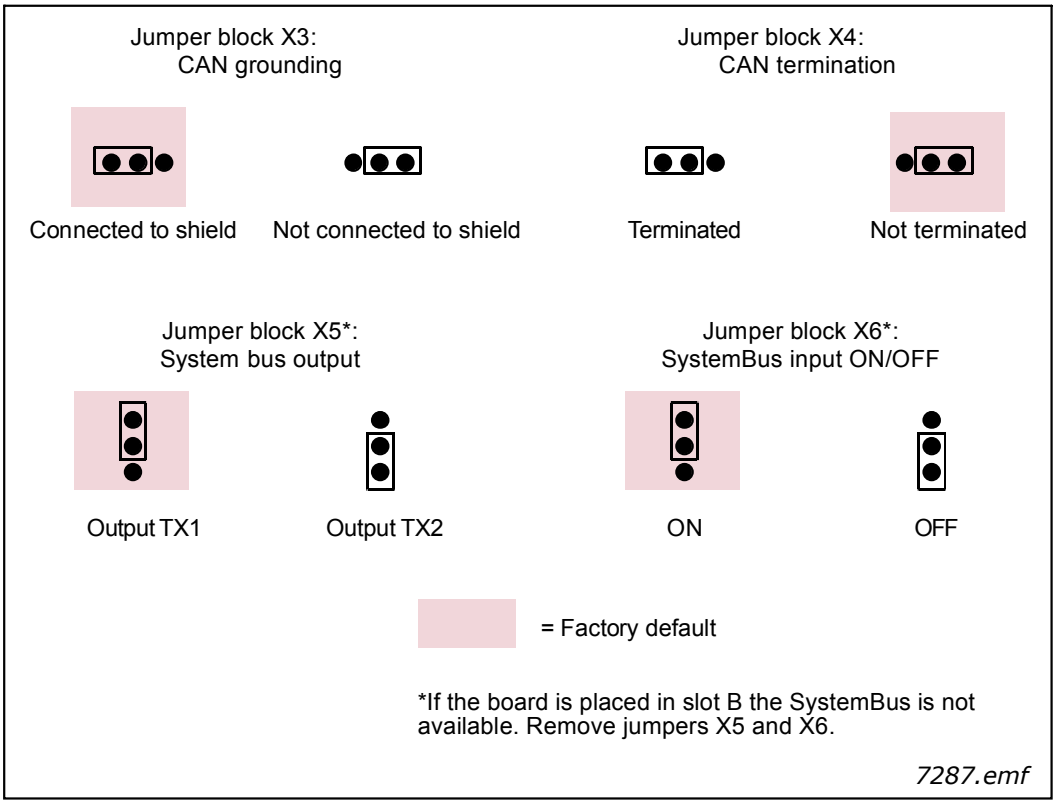

Figure 25. Jumper selections for OPTD2, up to version G

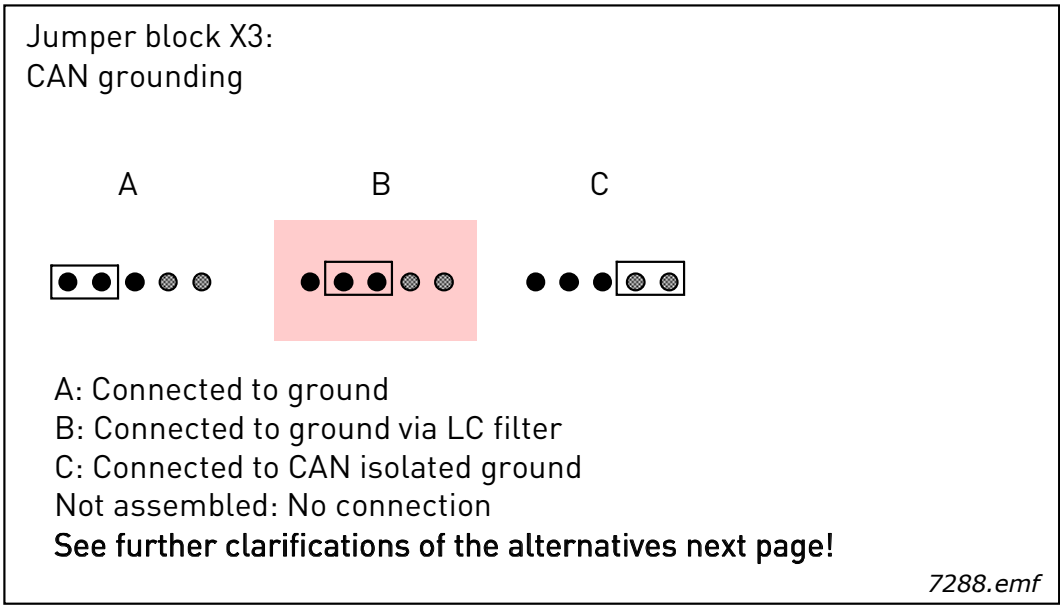

Figure 26. X3 jumper selections for OPTD2, version H and later

NOTE! Position C can be used with 3- or 4-wire can cable to interconnect isolated CAN ground levels in the network. It is recommended to connect the cable shield to the grounding clamp of the drive

Tel. +358 (0) 201 2121 • Fax +358 (0)201 212 205
Artisan Technology Group - Quality Instrumentation ... Guaranteed | (888) 88-SOURCE | www.artisantg.com

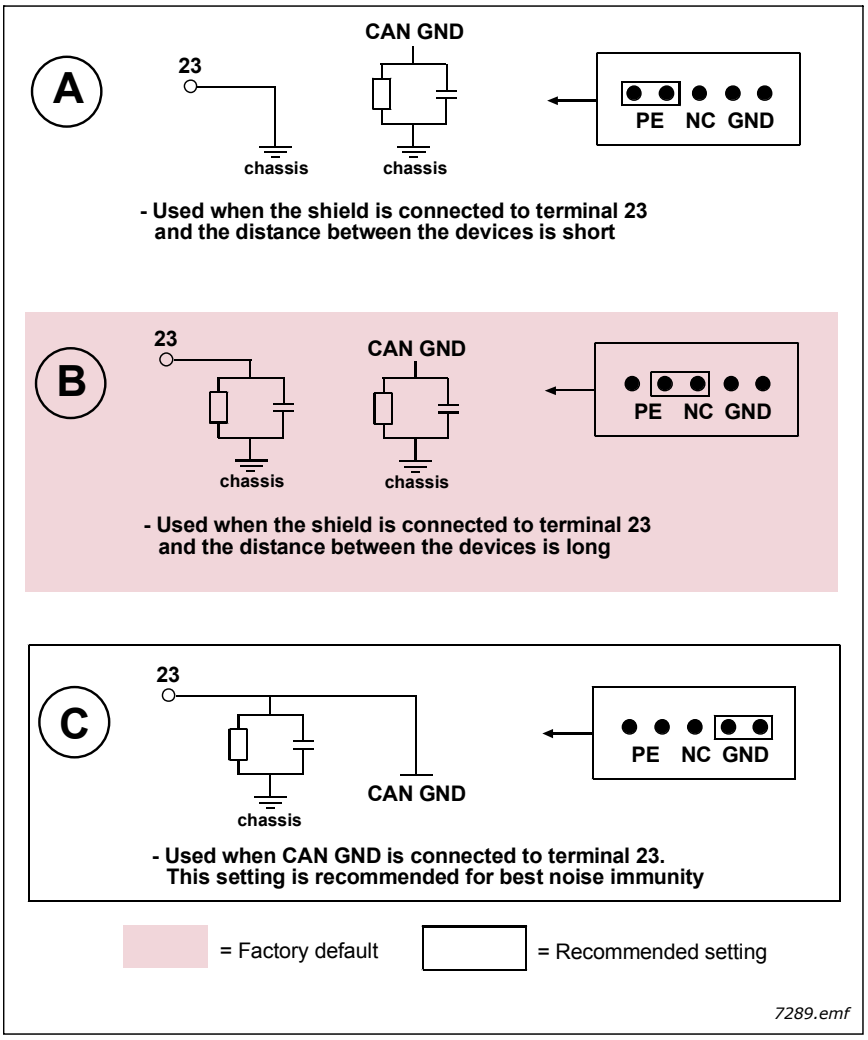

Figure 27. CAN grounding alternatives

Alternative connection of "CAN GND" signal: connect 'CAN GND' together between all nodes. Use the signal wire inside the shield for this purpose, see figure below:

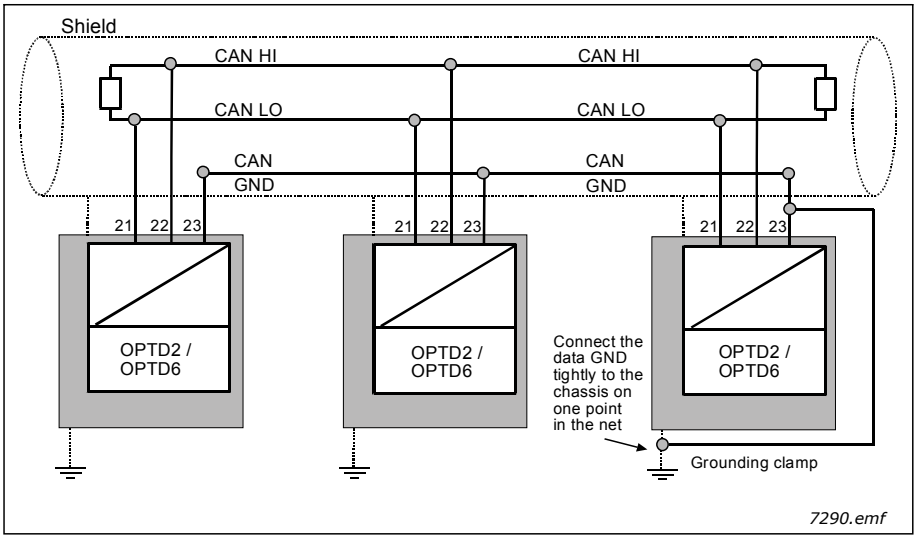

Figure 28. Alternative connection of "CAN GND" signal

Artisan Technology Group - Quality Instrumentation ... Guaranteed | (888) 88-SOURCE | www.artisantg.com

Connections between frequency converters with OPTD2

Special connection:

In this connection example, the leftmost device is the Master and the others are slaves. The Master can send and receive data from the slaves. The slaves cannot communicate with each other. Changing of masters is not possible, the first device is always the Master.

The OPTD2 board in the Master has the default jumper selections, i.e. X6:1-2, X5:1-2. The jumper positions have to be changed for the slaves: X6: 1-2, X5:2-3.

Table 39.

Max. number of devices in line	Max. speed achieved [Mbit/s]
3	12
6	6
12	3
24	1.5

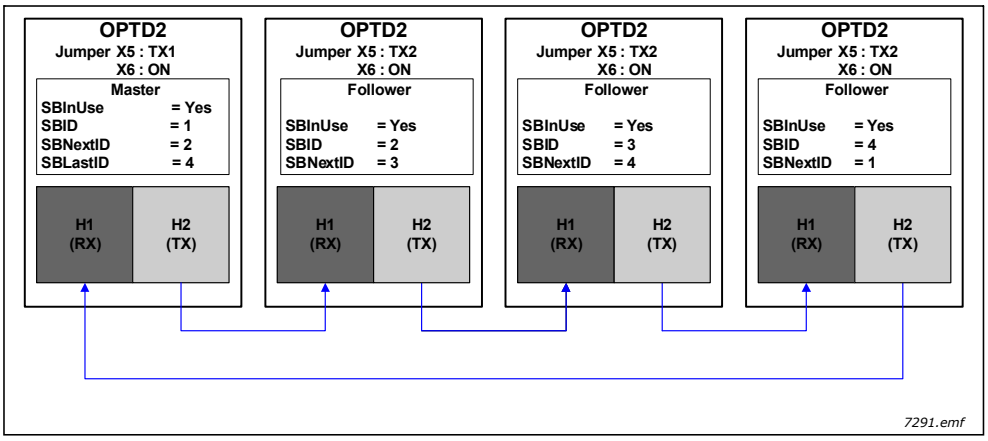

Figure 29. Connection example of frequency converters with OPTD2

Tel. +358 (0) 201 2121 • Fax +358 (0)201 212 205

Artisan Technology Group - Quality Instrumentation ... Guaranteed | (888) 88-SOURCE | www.artisantg.com

3.3.3 OPTD3

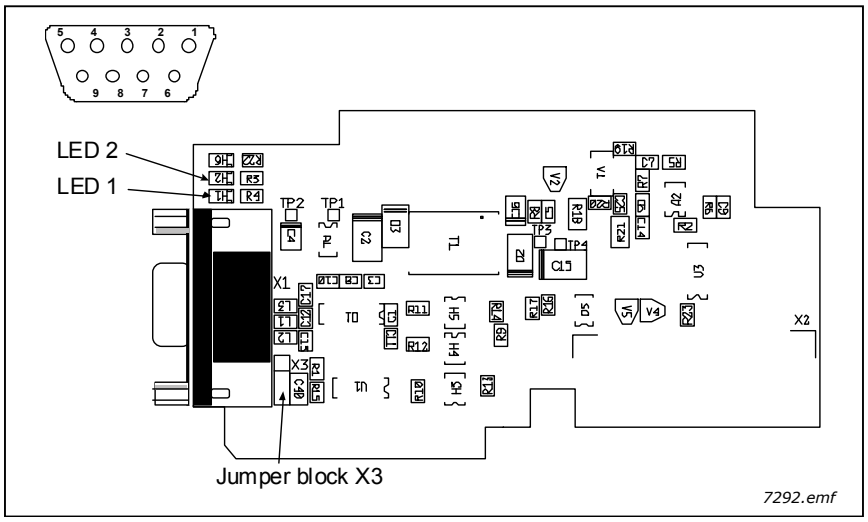

Description:	RS-232 adapter board. Galvanically decoupled. Used mainly for application engineering to connect another keypad.
Allowed slots:	D, E.
Type ID:	17459
Terminals:	9-pin female sub-D-connector
Jumpers:	1; X3 (see page 77)
Board parameters:	None

I/O terminals on OPTD3

Table 40. OPTD3 I/O terminals

Terminal		Technical information
1		
2	TxD	Transmit data
3	RxD	Receive data
4		
5	GND	Ground isolated
6	+9V	+9V isolated
7		
8		
9		

NOTE:
If OPTCI Ethernet Option board is used for NC Tools connection, like NCLoad, the OPTD3 board can not be used.

Artisan Technology Group - Quality Instrumentation ... Guaranteed | (888) 88-SOURCE | www.artisantg.com

Jumper selections

There is one jumper block on the OPTD3 board. The factory defaults and other available jumper selections are presented below:

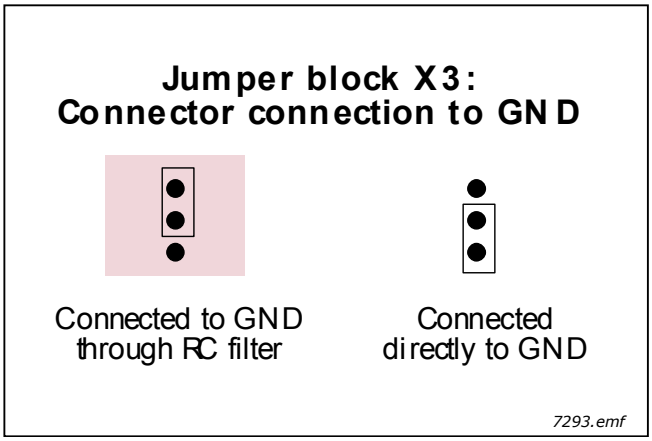

OPTD3 option board status LEDs

Table 41.

LED	Meaning
Green (LED 1)	Receiving data
Red (LED 2)	Transmitting data

Tel. +358 (0) 201 2121 • Fax +358 (0)201 212 205
Artisan Technology Group - Quality Instrumentation ... Guaranteed | (888) 88-SOURCE | www.artisantg.com

3.3.4 OPTD6

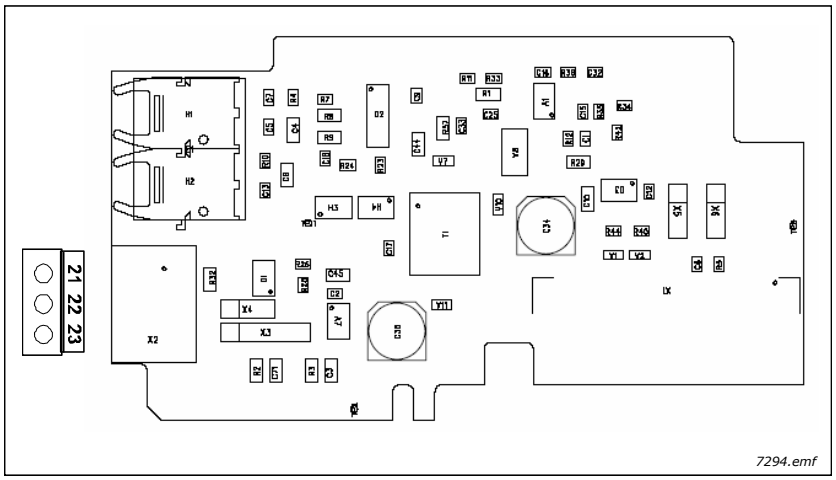

Note!	*This figure presents the layout of D6 board version F or later. See Chapter Jumper selections below.*
Description:	Monitor Bus adapter board for Vacon NXP. Interface to fast monitor bus used by the NCDrive PC tool.
Allowed slots:	B, D, E.
Type ID:	17462
Terminals:	One screw terminal block (M3)
Jumpers:	2; X3, X4.
Board parameters:	None

I/O terminals on OPTD6

Table 42. OPTD6 I/O terminals

Terminal		Technical information
21	CAN_L	Monitor Bus negative data
22	CAN_H	Monitor Bus positive data
23	CAN_GND	Monitor Bus ground

Artisan Technology Group - Quality Instrumentation ... Guaranteed | (888) 88-SOURCE | www.artisantg.com

Jumper selections

There are two jumper blocks on the OPTD6 board. The factory defaults and other available jumper selections are presented below:

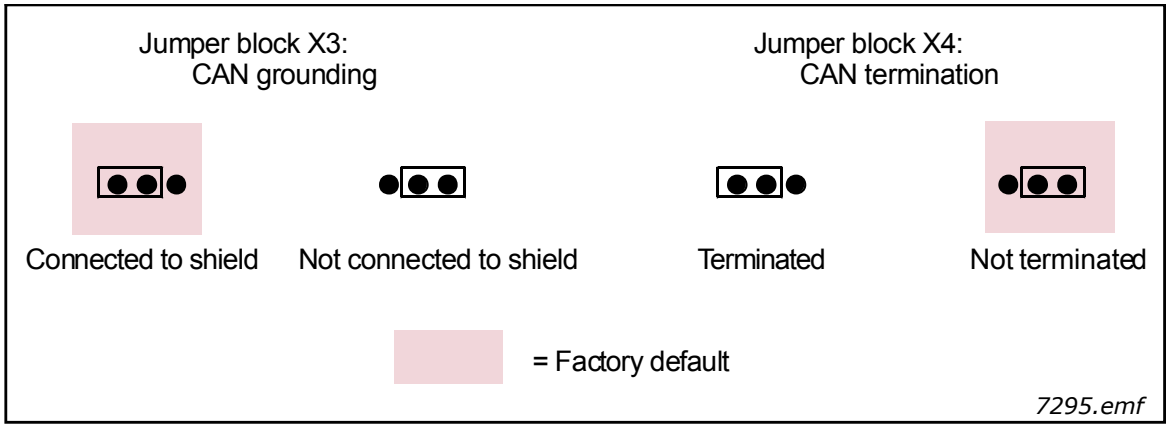

Figure 30. Jumper selections for OPTD6, up to version E.

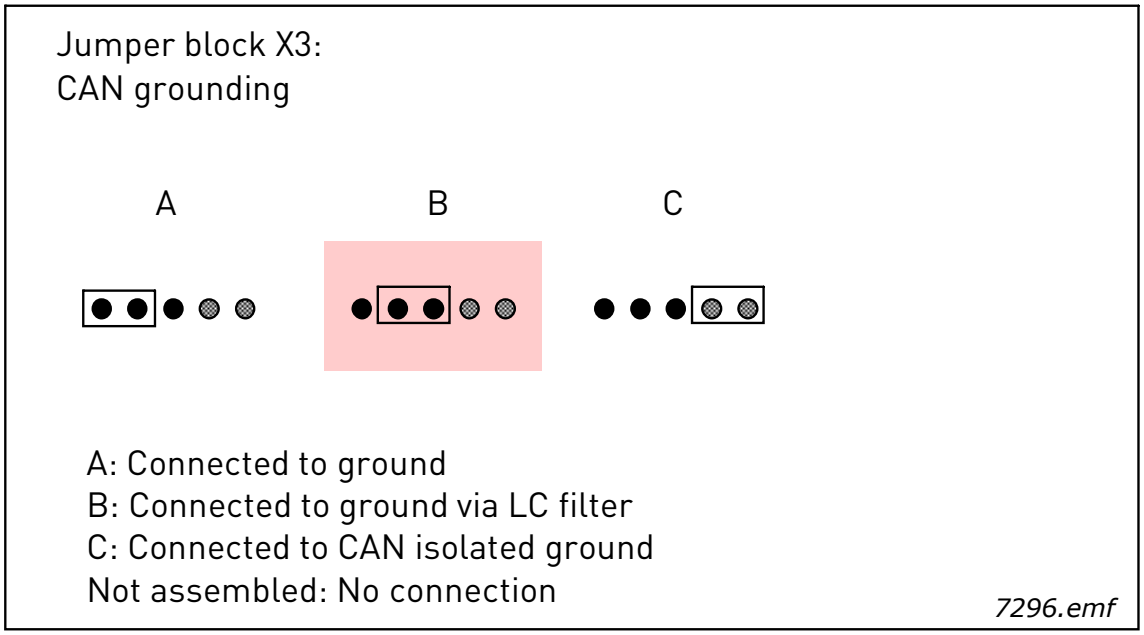

Figure 31. X3 jumper selections for OPTD6, version F and later.

NOTE! Position C can be used with 3- or 4-wire can cable to interconnect isolated CAN ground levels in the network. It is recommended to connect the cable shield to the grounding clamp of the drive.
See more details of the alternatives on page 74.

Tel. +358 (0) 201 2121 • Fax +358 (0)201 212 205
Artisan Technology Group - Quality Instrumentation ... Guaranteed | (888) 88-SOURCE | www.artisantg.com

4. VACON OPTION BOARDS – OPERATIONAL DETAILS

Table 43. Vacon option boards, types A and B

Board type	Slots allowed[6]	ID	DI	DO	AI (mA/V)	AI (mA), isol.	AO (mA/V)	AO (mA), isol.	RO (no/nc)	RO (no)	+10V ref	TI	+24V/ EXT +24V	42-240 VAC	DI (Enc. 10-24V)	DI (Enc. RS-422)	Out +5/ +15V/ +24V	Out +15/ +24V	Pt-100
Basic boards OPTA_																			
OPTA1	A	16689	6	1	2		1				1		2						
OPTA2	B	16690							2										
OPTA3	B	16691							1	1		1							
OPTA4[4]	C	16692														3	1		
OPTA5[4]	C	16693													3			1	
OPTA7	C	16695		2											6			1	
OPTA8	A	16696	6	1	2[1]		1[1]				1[1]		2						
OPTA9[3]	A	16697	6	1	2		1				1		2						
OPTAE[4]	A	16709		2											3				
OPTAL	A	16716		1	2[8]		2[9]							6					
OPTAN	A	16718	6		2[10]		2[10]				1[11]		1						
I/O expander boards OPTB_																			
OPTB1	BCDE	16945	6[5]	6[5]															
OPTB2	BCDE	16946							1	1		1							
OPTB4	BCDE	16948				1[2]		2[2]					1						
OPTB5	BCDE	16949								3									
OPTB8	BCDE	16952																	3
OPTB9	BCDE	16953								1				5					
OPTBB	C	16962 16963													2				
OPTBH	BCDE	16968																	

Tel. +358 (0) 201 21211 • Fax +358 (0)201 212 205

Artisan Technology Group - Quality Instrumentation ... Guaranteed | (888) 88-SOURCE | www.artisantg.com

Table 44. Vacon option boards, type D

Adapter boards NXOPTD_			
OPTD1	DE	17457	System Bus adapter board: 2 x fiber optic pairs
OPTD2[7)]	(B)DE	17458	System Bus adapter board: 1 x fiber optic pair & CAN bus adapter (galvanically decoupled)
OPTD3	DE	17459	RS232 adapter card (galvanically decoupled)
OPTD6	BDE	17462	MonitorBus adapter board (galvanically decoupled)

Explanations:

1) Analogue inputs AI1 and AI2, analogue output AO1 and voltage reference +10Vref galvanically decoupled (all these in same potential)
2) Analogue input AI1 and analogue outputs AO1 and AO2 galvanically decoupled from each other and other electronics
3) Similar to OPTA1 only with bigger terminals for 2.5mm^2 wires
4) Special application required for use in NXS
5) Bidirectional terminals
6) In case of several optional slots, the bold slot letter indicates the factory default slot (NOTE: not applicable if several boards with the same default slot are installed)
7) If the board is placed in slot B the SystemBus is not available; only the Monitor Bus can be used. Remove jumpers X5 and X6.
8) AI1 0-10V, AI2 -10V...+10V
9) AO1 mA, AO2 V
10) 2 (mA/V), incl. -10...+10V
11) Also -10V ref

Tel. +358 (0) 201 2121 • Fax +358 (0)201 212 205

Artisan Technology Group - Quality Instrumentation ... Guaranteed | (888) 88-SOURCE | www.artisantg.com

Table 45. All in One applications and supported Vacon NX option boards

	NXS, NXP							NXL
Board type								
Basic boards OPTA_	**Basic NXFIFF01**	**Standard NXFIFF02**	**Local-Remote NXFIFF03**	**Multi-step speed NXFIFF04**	**PID NXFIFF05**	**Multi-purpose NXFIFF06**	**PFC NXFIFF07**	**Multi-control**
OPTA1	●	●	●	●	●	●6)	●6)	
OPTA2	●	●	●	●	●	●6)	●6)	
OPTA3		●	●	●	●	●6)	●6)	
OPTA4	■	■	■	■	■	■	■	
OPTA5 (NXP only)	■	■	■	■	■	■	■	
OPTA7 (NXP only)	▲	▲	▲	▲	▲	▲	▲	
OPTA8	●	●	●	●	●	●6)	●6)	
OPTA9	●	●	●	●	●	●6)	●6)	
OPTAE (NXP only)	■	■	■	■	■	■	■	
OPTAL	●	●	●	●	●	●	●	
I/O expander boards OPTB_								
OPTB1						●6)	●6)	
OPTB2						●6)	●6)	*
OPTB4		●	●	●	●	●6)	●6)	*
OPTB5						●6)	●6)	*
OPTB8					●	●	●	
OPTB9,						●6)	●6)	
Adapter boards OPTD_								
OPTD1 (NXP only)	■	■	■	■	■	■	■	
OPTD2[7)] (NXP only)	■	■	■	■	■	■	■	
OPTD3	●	●	●	●	●	●	●	
OPTD6[7)] (NXP only)	■	■	■	■	■	■	■	

● = Used with this application (NXS, NXP)

■ = Used with this application (NXP)

▲ = Used with special applications only

6) = Digital inputs, digital outputs, analogue inputs and analogue outputs can be programmed

7) = This board is supported by specified applications if program NC_{Sys-} Drive is used

*) = Used with this application (NXL)

Artisan Technology Group - Quality Instrumentation ... Guaranteed | (888) 88-SOURCE | www.artisantg.com

VACON

DRIVEN BY DRIVES

Find your nearest Vacon office on the Internet at:

www.vacon.com

Manual authoring:
documentation@vacon.com

Vacon Plc.
Runsorintie 7
65380 Vaasa
Finland

Subject to change without prior notice

© 2011 Vacon Plc.

Document ID:

DPD00884

Rev. A

Artisan Technology Group - Quality Instrumentation ... Guaranteed | (888) 88-SOURCE | www.artisantg.com

Artisan Technology Group is an independent supplier of quality pre-owned equipment

Gold-standard solutions

Extend the life of your critical industrial, commercial, and military systems with our superior service and support.

We buy equipment

Planning to upgrade your current equipment? Have surplus equipment taking up shelf space? We'll give it a new home.

Learn more!

Visit us at **artisantg.com** for more info on price quotes, drivers, technical specifications, manuals, and documentation.

Artisan Scientific Corporation dba Artisan Technology Group is not an affiliate, representative, or authorized distributor for any manufacturer listed herein.

We're here to make your life easier. How can we help you today?

(217) 352-9330 | sales@artisantg.com | artisantg.com

ARTISAN® TECHNOLOGY GROUP